MITSUBISHI ELECTRIC

Programmable Controller

MELSEC Q series

I/O Module Type Building Block User's Manual

QX10
QX10-TS
QX28
QX40
QX40-S1
QX40-TS
QX40H
QX41
QX41-S1
QX41-S2
QX42
QX42-S1
QX50
QX70
QX70H
QX71
QX72
QX80
QX80-TS
QX80H
QX81
QX81-S2
QX82
QX82-S1
QX90H

QY10
QY10-TS
QY18A
QY22
QY40P
QY40P-TS
QY41H
QY41P
QY42P
QY50
QY68A
QY70
QY71
QY80
QY80-TS
QY81P
QY82P
QH42P
QX41Y41P
QX48Y57
QI60

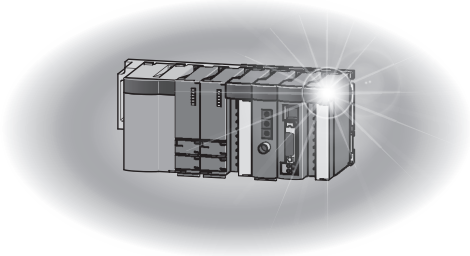

• SAFETY PRECAUTIONS •

(Read these precautions before using this product.)

Before using this product, please read this manual and the relevant manuals carefully and pay full attention to safety to handle the product correctly.
The precautions given in this manual are concerned with this product only. For the safety precautions of the programmable controller system, refer to the user's manual for the CPU module used.
In this manual, the safety precautions are classified into two levels: "⚠WARNING" and "⚠CAUTION".

⚠ WARNING	Indicates that incorrect handling may cause hazardous conditions, resulting in death or severe injury.
⚠ CAUTION	Indicates that incorrect handling may cause hazardous conditions, resulting in minor or moderate injury or property damage.

Under some circumstances, failure to observe the precautions given under "⚠CAUTION" may lead to serious consequences.
Observe the precautions of both levels because they are important for personal and system safety.

Make sure that the end users read this manual and then keep the manual in a safe place for future reference.

[Design Precautions]

⚠ WARNING

• Configure safety circuits external to the programmable controller to ensure that the entire system operates safely even when a fault occurs in the external power supply or the programmable controller. Failure to do so may result in an accident due to an incorrect output or malfunction.
(1) Configure external safety circuits, such as an emergency stop circuit, protection circuit, and protective interlock circuit for forward/reverse operation or upper/lower limit positioning.
(2) When the programmable controller detects an abnormal condition, it stops the operation and all outputs are:
(a) Turned off if the overcurrent or overvoltage protection of the power supply module is activated.
(b) Held or turned off according to the parameter setting if the self-diagnostic function of the CPU module detects an error such as a watchdog timer error.
Note, however, that AnS series modules on the system turn off all outputs in both cases. All outputs may turn on if an error occurs in a part, such as an I/O control part, where the CPU module cannot detect any error. To ensure safety operation in such a case, provide a safety mechanism or a fail-safe circuit external to the programmable controller. For a fail-safe circuit example, refer to the user's manual for the CPU module used.
(3) Outputs may remain on or off due to a failure of an output module relay or transistor. Configure an external circuit for monitoring output signals that could cause a serious accident.

[Design Precautions]

⚠ WARNING

- In an output module, when a load current exceeding the rated current or an overcurrent caused by a load short-circuit flows for a long time, it may cause smoke and fire. To prevent this, configure an external safety circuit, such as a fuse.
- Configure a circuit so that the programmable controller is turned on first and then the external power supply.
  If the external power supply is turned on first, an accident may occur due to an incorrect output or malfunction.
- For the operating status of each station after a communication failure, refer to relevant manuals for each network.
  Incorrect output or malfunction due to a communication failure may result in an accident.
- When changing data of the running programmable controller from a peripheral connected to the CPU module or from a personal computer connected to an intelligent function module, configure an interlock circuit in the sequence program to ensure that the entire system will always operate safely.
  For other controls to a running programmable controller (such as program modification or operating status change), read relevant manuals carefully and ensure the safety before the operation.
  Especially, in the case of a control from an external device to a remote programmable controller, immediate action cannot be taken for a problem on the programmable controller due to a communication failure.
  To prevent this, configure an interlock circuit in the sequence program, and determine corrective actions to be taken between the external device and CPU module in case of a communication failure.

[Design Precautions]

⚠ CAUTION

- Do not install the control lines or communication cables together with the main circuit lines or power cables.
  Keep a distance of 100mm or more between them.
  Failure to do so may result in malfunction due to noise.
- When a device such as a lamp, heater, or solenoid valve is controlled through an output module, a large current (approximately ten times greater than normal) may flow when the output is turned from off to on. Take measures such as replacing the module with one having a sufficient current rating.

A - 2

[Security Precautions]

⚠ WARNING

- To maintain the security (confidentiality, integrity, and availability) of the programmable controller and the system against unauthorized access, denial-of-service (DoS) attacks, computer viruses, and other cyberattacks from external devices via the network, take appropriate measures such as firewalls, virtual private networks (VPNs), and antivirus solutions.

[Installation Precautions]

⚠ CAUTION

- Use the programmable controller in an environment that meets the general specifications in the user's manual for the CPU module used.
  Failure to do so may result in electric shock, fire, malfunction, or damage to or deterioration of the product.
- To mount the module, while pressing the module mounting lever located in the lower part of the module, fully insert the module fixing projection(s) in the hole(s) in the base unit and press the module until it snaps into place.
  Incorrect interconnection may cause malfunction, failure, or drop of the module.
  When using the programmable controller in an environment of frequent vibrations, fix the module with a screw.
  Tighten the screw within the specified torque range.
  Undertightening can cause drop of the screw, short circuit or malfunction.
  Overtightening can damage the screw and/or module, resulting in drop, short circuit, or malfunction.
- When using an extension cable, connect it to the extension cable connector of the base unit securely.
  Check the connection for looseness.
  Poor contact may cause incorrect input or output.
- When using a memory card, fully insert it into the memory card slot.
  Check that it is inserted completely.
  Poor contact may cause malfunction.
- Shut off the external power supply for the system in all phases before mounting or removing the module.
  Failure to do so may result in damage to the product.
- Do not touch the module during turning on electricity and immediately after power supply interception. There is fear of a burn.
- Do not directly touch any conductive parts and electronic components of the module.
  Doing so can cause malfunction or failure of the module.

[Wiring Precautions]

⚠ WARNING

- Shut off the external power supply for the system in all phases before wiring.
  Failure to do so may result in electric shock or damage to the product.
- After wiring, attach the included terminal cover to the module before turning it on for operation.
  Failure to do so may result in electric shock.

[Wiring Precautions]

⚠ CAUTION

- Individually ground the FG and LG terminals of the programmable controller with a ground resistance of 100 Ω or less.
  Failure to do so may result in electric shock or malfunction.
- Check the rated voltage and terminal layout before wiring to the module, and connect the cables correctly.
  Connecting a power supply with a different voltage rating or incorrect wiring may cause a fire or failure.
- Connectors for external devices must be crimped or pressed with the tool specified by the manufacturer, or must be correctly soldered.
  Incomplete connections may cause short circuit, fire, or malfunction.
- When connecting or removing the connectors for external devices, insert or remove them perpendicularly to the surface.
  Pushing in or pulling out them at an angle may cause poor contact due to distorted connector pins, resulting in malfunction.
- Tighten the terminal screw within the specified torque range.
  Undertightening can cause short circuit, fire, or malfunction.
  Overtightening can damage the screw and/or module, resulting in drop, short circuit, or malfunction.
- Prevent foreign matter such as dust or wire chips from entering the module.
  Such foreign matter can cause a fire, failure, or malfunction.
- A protective film is attached to the top of the module to prevent foreign matter, such as wire chips, from entering the module during wiring.
  Do not remove the film during wiring.
  Remove it for heat dissipation before system operation.
- Mitsubishi Electric programmable controllers must be installed in control panels.
  Connect the main power supply to the power supply module in the control panel through a relay terminal block.
  Wiring and replacement of a power supply module must be performed by qualified maintenance personnel with knowledge of protection against electric shock.
  (For wiring methods, refer to the QCPU User's Manual (Hardware Design, Maintenance and Inspection).)

A - 4

[Startup and Maintenance Precautions]

⚠ WARNING

- Do not touch any terminal while power is on.
  Doing so will cause electric shock.
- Correctly connect the battery connector.
  Do not charge, disassemble, heat, short-circuit, or solder the battery, or throw it into the fire.
  Doing so will cause the battery to produce heat, explode, or ignite, resulting in injury and fire.
- Shut off the external power supply for the system in all phases before cleaning the module or retightening the terminal screws or module fixing screws.
  Failure to do so may result in electric shock.
  Undertightening the terminal screws can cause short circuit or malfunction.
  Overtightening can damage the screw and/or module, resulting in drop, short circuit, or malfunction.

[Startup and Maintenance Precautions]

⚠ CAUTION

- Before performing online operations (especially, program modification, forced output, and operating status change) for the running CPU module from the peripheral device connected, read relevant manuals carefully and ensure the safety.
  Improper operation may damage machines or cause accidents.
- Do not disassemble or modify the modules.
  Doing so may cause failure, malfunction, injury, or a fire.
- Shut off the external power supply for the system in all phases before mounting or removing the module.
  Failure to do so may cause the module to fail or malfunction.
- After the first use of the product, do not mount/remove the module to/from the base unit, and the terminal block to/from the module more than 50 times (IEC 61131-2 compliant) respectively.
  Exceeding the limit may cause malfunction.
- Before handling the module, touch a grounded metal object to discharge the static electricity from the human body.
  Failure to do so may cause the module to fail or malfunction.

[Disposal Precautions]

⚠ CAUTION

- When disposing of this product, treat it as industrial waste.

• CONDITIONS OF USE FOR THE PRODUCT •

(1) MELSEC programmable controller ("the PRODUCT") shall be used in conditions;

i) where any problem, fault or failure occurring in the PRODUCT, if any, shall not lead to any major or serious accident; and

ii) where the backup and fail-safe function are systematically or automatically provided outside of the PRODUCT for the case of any problem, fault or failure occurring in the PRODUCT.

(2) The PRODUCT has been designed and manufactured for the purpose of being used in general industries.

MITSUBISHI ELECTRIC SHALL HAVE NO RESPONSIBILITY OR LIABILITY (INCLUDING, BUT NOT LIMITED TO ANY AND ALL RESPONSIBILITY OR LIABILITY BASED ON CONTRACT, WARRANTY, TORT, PRODUCT LIABILITY) FOR ANY INJURY OR DEATH TO PERSONS OR LOSS OR DAMAGE TO PROPERTY CAUSED BY the PRODUCT THAT ARE OPERATED OR USED IN APPLICATION NOT INTENDED OR EXCLUDED BY INSTRUCTIONS, PRECAUTIONS, OR WARNING CONTAINED IN MITSUBISHI ELECTRIC USER'S, INSTRUCTION AND/OR SAFETY MANUALS, TECHNICAL BULLETINS AND GUIDELINES FOR the PRODUCT.

("Prohibited Application")

Prohibited Applications include, but not limited to, the use of the PRODUCT in;

- Nuclear Power Plants and any other power plants operated by Power companies, and/or any other cases in which the public could be affected if any problem or fault occurs in the PRODUCT.
- Railway companies or Public service purposes, and/or any other cases in which establishment of a special quality assurance system is required by the Purchaser or End User.
- Aircraft or Aerospace, Medical applications, Train equipment, transport equipment such as Elevator and Escalator, Incineration and Fuel devices, Vehicles, Manned transportation, Equipment for Recreation and Amusement, and Safety devices, handling of Nuclear or Hazardous Materials or Chemicals, Mining and Drilling, and/or other applications where there is a significant risk of injury to the public or property.

Notwithstanding the above restrictions, Mitsubishi Electric may in its sole discretion, authorize use of the PRODUCT in one or more of the Prohibited Applications, provided that the usage of the PRODUCT is limited only for the specific applications agreed to by Mitsubishi Electric and provided further that no special quality assurance or fail-safe, redundant or other safety features which exceed the general specifications of the PRODUCTs are required. For details, please contact the Mitsubishi Electric representative in your region.

(3) Mitsubishi Electric shall have no responsibility or liability for any problems involving programmable controller trouble and system trouble caused by DoS attacks, unauthorized access, computer viruses, and other cyberattacks.

A - 6

REVISIONS

* The manual number is given on the bottom left of the back cover.

Print Date	* Manual Number	Revision
Dec., 1999	SH(NA)-080042-A	First edition
Feb., 2000	SH(NA)-080042-B	Addition model QH42P, QX48Y57, QX70, QX71, QX72, QY18A Addition Chapter 4 Partial correction Section 1.2, Chapter 5, 8.1 Chapters 4 to 8 (changed into Chapters 5 to 9)
Apr., 2000	SH(NA)-080042-C	Deletion QY18A
Jul., 2000	SH(NA)-080042-D	Addition model QX28, QX40-S1, QY18A, QY22, QI60 Addition Chapter 5 Partial correction Section 1.2 Chapters 5 to 9 (changed into Chapters 6 to 10)
Nov., 2000	SH(NA)-080042-E	Addition model QY70, QY71 Addition Section 1.3 Partial correction CONTENTS, Section 3.3, 5.1
Jan., 2001	SH(NA)-080042-F	Addition model QY68A Addition Section 10.2 Partial correction CONTENTS, Section 1.2, 3.3, 5.1, Chapters 7
Mar., 2001	SH(NA)-080042-G	Partial correction Section 2.4, 8.1
Jul., 2001	SH(NA)-080042-H	Addition model Q6TE-18S Addition Chapter 9, APP 1.3 Partial correction CONTENTS, Section 2.1, 2.2, 2.4, 5.1 Chapters 9 to 10 (changed into Chapters 10 to 11)
Jul., 2002	SH(NA)-080042-I	Addition model QX41-S1, QX42-S1, A6CON4

Print Date	* Manual Number	Revision
Mar., 2003	SH(NA)-080042-J	Addition model QX82
May, 2003	SH(NA)-080042-K	Partial correction Section 1.2, 2.2
May, 2003	SH(NA)-080042-L	Addition model QX82-S1 Partial correction Section 1.2, 3.3 Addition Section 2.15
Jul., 2004	SH(NA)-080042-M	Partial correction Section 1.2, 2.1 to 2.15, 3.1 to 3.12, 4.1, 4.2, 5.1, 8.1, 8.2.1, 8.2.2, 10
Jul., 2005	SH(NA)-080042-N	Partial correction SAFETY PRECAUTIONS, Section 3.3 Addition Appendix 1.3
Apr., 2006	SH(NA)-080042-O	Partial correction SAFETY PRECAUTIONS, Section 4.1, Chapter 6
Sep., 2006	SH(NA)-080042-P	Partial correction Section 11.1, 11.2, Appendix 1.2, 1.3
Oct., 2006	SH(NA)-080042-Q	Addition model QX50 Partial correction SAFETY PRECAUTIONS, Section 2.10 to 2.16, 3.4 to 3.12, 4.1, 4.2 Addition Section 2.9
Sep., 2007	SH(NA)-080042-R	Addition model QX41Y41P Partial correction Section 1.2, 1.3.3, 2.1 to 2.16, 3.1 to 3.12, 4.1, 4.3, 5.1, 7.1, 8.1, Chapter 10, Section 11.1, 11.2, Appendix 1.2 Addition Section 4.2
Jun., 2008	SH(NA)-080042-S	Addition model QX10-TS, QX40-TS, QX80-TS, QY10-TS, QY40P-TS, QY80-TS Partial correction Section 1.2, 2.3 to 2.19, 3.3 to 3.15, 9.2, Chapter 10 Addition Section 2.2, 2.6, 2.16, 3.2, 3.6, 3.14, 9.1, 9.3

Print Date	* Manual Number	Revision
Oct., 2008	SH(NA)-080042-T	Addition model QX40-H, QX70-H, QX80-H, QX90-H Partial correction Section 1.2.5, 1.3.1, 2.8 to 2.23, 9.2, Chapter 10 Addition Section 2.7, 2.14, 2.19, 2.23
Apr., 2009	SH(NA)-080042-U	Addition model QX41-S2, QX81-S2 Partial correction Section 2.7, 2.11 to 2.25, 5.1, 8.1 Addition Section 2.10, 2.22
May, 2010	SH(NA)-080042-V	External connections are reviewed according to IEC 60617. Addition model QY82P Partial correction SAFETY PRECAUTIONS, Section 1.1, 1.2, Chapter 2 to 4, Chapter 7, Section 8.1, Chapter 10, Section 11.1, 11.2, Appendix 1.1 Addition CONDITIONS OF USE FOR THE PRODUCT, Section 3.16
Jul., 2011	SH(NA)-080042-W	Addition model Q6TE-18SN Partial correction Section 1.2.1, 1.2.2, 1.2.3, 1.2.6, 3.11, Chapter 7, Section 9.1, 9.2, Chapter 10, Section 11.2, Appendix 1.3
Mar., 2012	SH(NA)-080042-X	Addition model QY41H Partial correction Section 1.2.2, 2.3, 3.8 to 3.17, Chapter 7, Section 8.1 Addition Section 3.7
Jun., 2013	SH(NA)-080042-Y	Partial correction Section 1.2.1, 1.3.1, 2.7, 2.15, 2.20, 2.25, 11.2
Dec., 2013	SH(NA)-080042-Z	Partial correction Section 2.8, 2.9, 2.10, 2.11, 2.12, 2.16, 2.17, 2.21, 2.22, 2.23, 2.24, 3.7, 3.8, 3.9, 3.13, 3.16, 3.17, 4.1, 4.2, Chapter 7, Appendix 1.2
Oct., 2014	SH(NA)-080042-AA	Partial correction SAFETY PRECAUTIONS, Section 1.2.2, 3.4, 9.2, 11.2

Print Date	* Manual Number	Revision
Sep., 2015	SH(NA)-080042-AB	Partial correction Section 1.2.6, Chapter 2, Chapter 3, Section 5.1, Chapter 6, Section 8.1, Section 9.1, Appendix 1.1, Appendix 1.2, Appendix 1.3, Appendix 1.4
Mar., 2017	SH(NA)-080042-AC	Partial correction Section 1.2.2
Feb., 2018	SH(NA)-080042-AD	Partial correction Section 1.2.3, 2.3, 9.1, 9.2
Nov., 2019	SH(NA)-080042-AE	Partial correction Section 2.7, 2.20
Jun., 2021	SH(NA)-080042-AF	Partial correction SAFETY PRECAUTIONS
Mar., 2024	SH(NA)-080042-AG	Partial correction SAFETY PRECAUTIONS, CONDITIONS OF USE FOR THE PRODUCT, Chapter 2, 3, 7

Japanese Manual Version SH-080024-AI

This manual confers no industrial property rights or any rights of any other kind, nor does it confer any patent licenses. Mitsubishi Electric Corporation cannot be held responsible for any problems involving industrial property rights which may occur as a result of using the contents noted in this manual.

© 1999 MITSUBISHI ELECTRIC CORPORATION

INTRODUCTION

Thank you for purchasing the Mitsubishi Electric MELSEC-Q series programmable controllers.
Before using this product, please read this manual carefully and develop familiarity with the functions and performance of the MELSEC-Q series programmable controller to handle the product correctly.

CONTENTS

SAFETY PRECAUTIONS ..... A- 1
CONDITIONS OF USE FOR THE PRODUCT ..... A- 6
REVISIONS ..... A- 7
INTRODUCTION ..... A- 11
CONTENTS ..... A- 11
ABOUT MANUALS ..... A- 14
COMPLIANCE WITH EMC AND LOW VOLTAGE DIRECTIVES ..... A- 14

1. GENERAL SPECIFICATIONS AND PRECAUTIONS FOR USE 1- 1 to 1- 22

1.1 General Specifications 1- 1
1.2 Precautions for Use 1- 1
1.2.1 Input module 1- 1
1.2.2 Output module 1- 3
1.2.3 I/O combined module 1-14
1.2.4 I/O module with protection function 1-15
1.2.5 Interrupt module 1-16
1.2.6 Installation and wiring 1-16
1.3 Various Settings for I/O Module 1-17
1.3.1 Setting of I/O response time 1-17
1.3.2 Setting of error-time output mode 1-20
1.3.3 Switch setting of interrupt module 1-21

2. INPUT MODULE SPECIFICATIONS 2- 1 to 2- 36

2.1 QX10 AC Input Module 2- 1
2.2 QX10-TS AC Input Module 2- 2
2.3 QX28 AC Input Module 2- 3
2.4 QX40 DC Input Module (Positive Common Type) 2- 4
2.5 QX40-S1 DC Input Module (Positive Common Type) 2- 5
2.6 QX40-TS DC Input Module (Positive Common Type) 2- 6
2.7 QX40H DC High-Speed Input Module (Positive Common Type) 2- 7
2.8 QX41 DC Input Module (Positive Common Type) 2- 9
2.9 QX41-S1 DC Input Module (Positive Common Type) 2-10
2.10 QX41-S2 DC Input Module (Positive Common Type) 2-12
2.11 QX42 DC Input Module (Positive Common Type) 2-13
2.12 QX42-S1 DC Input Module (Positive Common Type) 2-15
2.13 QX50 DC (Positive Common/Negative Common Shared Type)/ AC Input Module 2-17
2.14 QX70 DC Input Module (Positive Common/Negative Common Shared Type) 2-18
2.15 QX70H DC High-speed Input Module (Positive Common Type) 2-19
2.16 QX71 DC Input Module (Positive/Negative Shared Common Type) 2-21
2.17 QX72 DC Input Module (Positive/Negative Shared Common Type) 2-22
2.18 QX80 DC Input Module (Negative Common Type) 2-24
2.19 QX80-TS DC Input Module (Negative Common Type) 2-25

2.20 QX80H DC High-speed Input Module (Negative Common Type) 2-26
2.21 QX81 DC Input Module (Negative Common Type) 2-28
2.22 QX81-S2 DC Input Module (Negative Common Type) 2-29
2.23 QX82 DC Input Module (Negative Common Type) 2-30
2.24 QX82-S1 DC Input Module (Negative Common Type) 2-32
2.25 QX90H DC High-speed Input Module (Negative Common Type) 2-34

3. OUTPUT MODULE SPECIFICATIONS 3- 1 to 3- 20

3.1 QY10 Contact Output Module 3- 1
3.2 QY10-TS Contact Output Module 3- 2
3.3 QY18A Contact Output Module (All Points Independent) 3- 4
3.4 QY22 TRIAC Output Module 3- 5
3.5 QY40P Transistor Output Module (Sink Type) 3- 7
3.6 QY40P-TS Transistor Output Module (Sink Type) 3- 8
3.7 QY41H Transistor High-speed Output Module (Sink Type) 3-10
3.8 QY41P Transistor Output Module (Sink Type) 3-11
3.9 QY42P Transistor Output Module (Sink Type) 3-12
3.10 QY50 Transistor Output Module (Sink Type) 3-13
3.11 QY68A Transistor Output Module (All Points Independent, Sink/Source Type) 3-15
3.12 QY70 Transistor Output Module (Sink Type) 3-16
3.13 QY71 Transistor Output Module (Sink Type) 3-18
3.14 QY80 Transistor Output Module (Source Type) 3-19
3.15 QY80-TS Transistor Output Module (Source Type) 3-21
3.16 QY81P Transistor Output Module (Source Type) 3-23
3.17 QY82P Transistor Output Module (Source Type) 3-24

4. I/O COMBINED MODULE 4- 1 to 4- 9

4.1 QH42P I/O Combined Module 4- 1
4.2 QX41Y41P I/O Combined Module 4- 4
4.3 QX48Y57 I/O Combined Module 4- 7

5. INTERRUPT MODULE 5- 1 to 5- 2

5.1 QI60 Interrupt Module 5- 1

6. BLANK COVER MODULE 6- 1 to 6- 2

7. CONNECTORS 7- 1 to 7- 2

8. SPECIFICATIONS OF CONNECTOR/TERMINAL BLOCK CONVERTER MODULES 8- 1 to 8- 7

8.1 Specifications of Connector/Terminal Block Converter Modules 8- 1
8.2 Connector/terminal block converter module connection diagrams 8- 3
8.2.1 A6TBXY36 ..... 8- 3
8.2.2 A6TBXY54 ..... 8- 4
8.2.3 A6TBX70 ..... 8- 5
8.2.4 A6TBX36-E 8- 5

8.2.5 A6TBY36-E 8- 6
8.2.6 A6TBX54-E 8- 6
8.2.7 A6TBY54-E 8- 7
8.2.8 A6TBX70-E 8- 7

9. SPRING CLAMP TERMINAL BLOCK 9- 1 to 9- 9

9.1 Spring Clamp Terminal Block I/O Module 9- 1
9.2 Spring Clamp Terminal Block (Q6TE-18S, Q6TE-18SN) 9- 6

10. PART NAMES 10- 1 to 10- 6

11. I/O MODULE TROUBLESHOOTING 11- 1 to 11- 8

11.1 Input Circuit Troubleshooting 11- 1
11.2 Output Circuit Troubleshooting 11- 4

APPENDICES App- 1 to App-13

Appendix 1 External Dimensions ..... App- 1
Appendix 1.1 I/O modules and blank cover module ..... App- 1
Appendix 1.2 Connectors, connector/terminal block converter modules ..... App- 5
Appendix 1.3 Connector/ terminal block converter module cable ..... App- 9
Appendix 1.4 Spring clamp terminal block App-10
Appendix 2 Compatibility with MELSEC-AnS Series I/O Modules App-11

ABOUT MANUALS

The following manuals are also related to this product.
In necessary, order them by quoting the details in the tables below.

Related Manuals

Manual Name	Manual Number (Model Code)
QCPU User's Manual (Hardware Design/Maintenance and Inspection) This manual provides the specifications of the CPU modules, power supply modules, base units, extension cables, memory cards and others. (Sold separately)	SH-080483ENG (13JR73)
QnUCPU User's Manual (Function Explanation/Program Fundamentals) This manual explains the functions, programming methods, devices on necessary to create programs with the QnUCPU. (Sold separately)	SH-080807ENG (13JZ27)
Qn(H)/QnPH/QnPRHCPU User's Manual (Function Explanation/Program Fundamentals) This manual explains the functions, programming methods, devices on necessary to create programs with the Qn(H)/QnPH/QnPRHCPU. (Sold separately)	SH-080808ENG (13JZ28)

COMPLIANCE WITH EMC AND LOW VOLTAGE DIRECTIVES

(1) Method of ensuring compliance

To ensure that Mitsubishi Electric programmable controllers maintain EMC and Low Voltage Directives when incorporated into other machinery or equipment, certain measures may be necessary. Please refer to one of the following manuals.

• QCPU User's Manual (Hardware Design, Maintenance and Inspection)
• Safety Guidelines (This manual is included with the CPU module or base unit.)

The CE mark on the side of the programmable controller indicates compliance with EMC and Low Voltage Directives.

(2) Additional measures

No additional measures are necessary for the compliance of this product with EMC and Low Voltage Directives.

A - 14

1. GENERAL SPECIFICATIONS AND PRECAUTIONS FOR USE

This chapter describes the general specifications and precautions for use of the I/O modules.

1.1 General Specifications

Refer to the following manual for the general specifications of the I/O modules.
• QCPU User's Manual (Hardware Design, Maintenance and Inspection)

1.2 Precautions for Use

1.2.1 Input module

(1) Simultaneous ON points
The number of simultaneous on points of input module depends on the input voltage and ambient temperature.
Refer to the derating chart of the input module specifications.

(2) Input response time and pulse width
Input modules may take in noise or the like as an input depending on the pulse width of a signal.
This pulse width has a value as listed below depending on the parameter-set response time. Set input response time while fully consider the operating environment.

Response time setting value (ms)	Minimum value of pulse width where noise or the like may be taken in as an input (ms)
1	0.3
5	3
10	6
20	12
70	45

For the setting of input response time values, refer to Section 1.3.1.

(3) Precautions for using the DC input module

(a) Measure against back EMF

When an inductive load is connected, connect a diode to the load in parallel. Use a diode that meets the following conditions.

- Reverse breakdown voltage is 10 times as high as the circuit voltage or more.
- Forward current is twice as high as the load current or more.

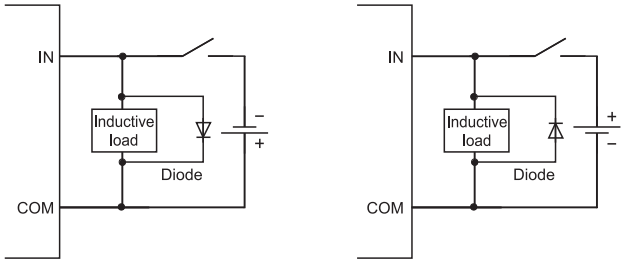

(4) Precautions for using the high-speed input module

Read the following precautions carefully when using the high-speed input modules (QX40H, QX70H, QX80H, and QX90H).

(a) When switching to the high-speed input, the specifications of the high-speed input modules and the input module QX40-S1 are identical. On the other hand, when switching to the interrupt input, the specifications of the high-speed input modules and the interrupt module QI60 are identical too. Therefore, the specifications of the input module (QX40-S1) are construed as the specifications of the high-speed input module switched to the high-speed input. Similarly, the specifications of the interrupt module (QI60) indicated in the manuals other than this manual are construed as the specifications of the high-speed input module switched to the interrupt input.

(b) By using setting switches on the bottom of the module (refer to Chapter 10), the high-speed input module switches module types (high-speed input or interrupt input) for 16 input points all together and between valid and invalid noise filters as shown below.

Noise filter selector switch (Switch 1)	Function selector switch (Switch 2)	GX Developer setting		
		Module type	Interrupt operation	Input response time
ON	ON	High-speed input*1	×	○
	OFF	Interrupt*1	○	
OFF	ON	High-speed input *1	×	× *2
	OFF	Interrupt*1	○	

○: Settable ×: Not settable

*1: When selecting an improper module type, an error (error code: 2100) occurs.

*2: The input response time value set in GX Developer is ignored.

(c) If the small number of value of input response time is set, the modules tend to have impact of noise. Ensure that the modules do not have impact of noise. For details of the measure against noise, refer to the QCPU User's Manual (Hardware Design, Maintenance and Inspection).

(d) The high-speed input modules connected with electric appliance such as relays may load a chattering as a signal.

(e) To use a high-speed input module as a CE marked product, keep the cable length 3m or less.

1.2.2 Output module

(1) Maximum switching frequency when the module drives inductive load
The output must be on for one second or longer and off for one second or longer.

(2) Load for connection
When connecting a counter or timer that has a DC-DC converter as a load, select an output module whose maximum load current is larger than inrush current of the load.
Selecting an output module by average current of the load may cause a failure of the module because inrush current flows at a constant frequency at power-on or during operation due to the connected load.
If an output module needs to be selected by average current of the load, take either of the following actions to reduce an influence from inrush current.

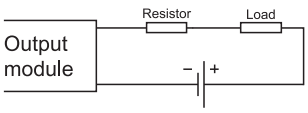

• Connecting a resistor to the load in series

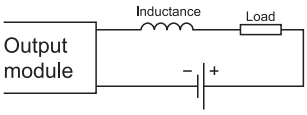

• Connecting an inductor to the load in series

(3) Replacement of fuses
Fuses installed to an output module cannot be replaced.

(4) Built-in fuses
Built-in fuses works to prevent the external cables from being burned when a short circuit occurs in the internal output circuit. For this reason, the output module may not be protected if the fuses blow any other reasons except for a short circuit.

(5) Fuses installed to external terminals

It is recommended to install fuses to each external terminal. These fuses works to prevent the external devices and the module from being burned when a short circuit occurs in the load circuit of the QY22 or QY68A.

The following table lists the fuses whose operations have been checked and ensured by Mitsubishi.

Module model	QY22*1		QY68A*2	
Fuse model	216 02.5	216 002	216 3.15	312 003
Rated current	2.5A	2A	3.15A	3A
Manufacturer	Littelfuse, Inc			

*1: Fuses that conform to Sheet 1 of IEC60127 are recommended.

*2: Fast blow fuses whose rated current is 3A are recommended.

(6) Precautions for using the transistor output module

(a) Action against reverse current

If a transistor output module is wired as shown below, reverse current flows in an output element, causing a failure of the element.

When wiring a transistor output module, connect a diode as shown below.

• When connecting transistor output modules in parallel

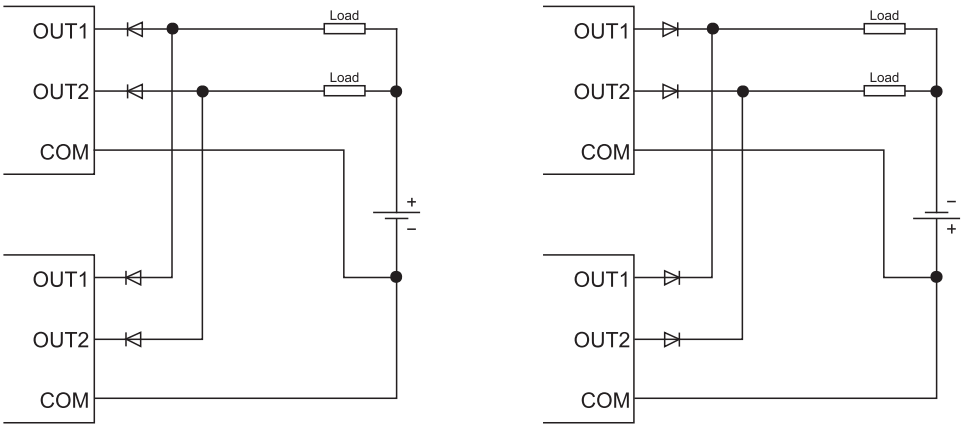

Sink type

Source type

• When incorporating an additional circuit parallel to a transistor output module

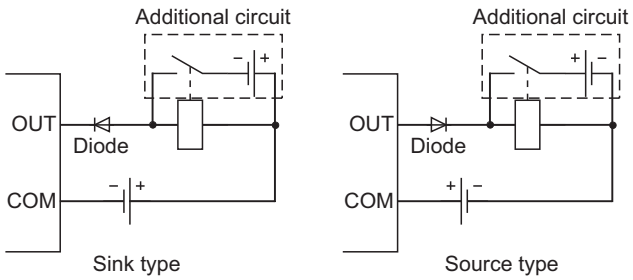

Sink type

Source type

(b) Measure against back EMF

When an inductive load is connected, connect a diode to the load in parallel. Use a diode that meets the following conditions.

- Reverse breakdown voltage is 10 times as high as the circuit voltage or more.
- Forward current is twice as high as the load current or more.

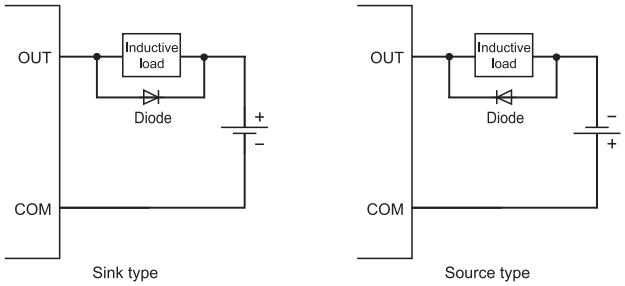

(7) Precautions for using the contact output module
When using the contact output module, consider the following.
- Relay life (contact switching life)
- Effects to relay life due to connected load
- Measures against back EMF

(a) Relay life
Applicable module: QY10, QY10-TS, QY18A
The relay life depends on the operating environment.
Select a module according to the operating environment.
The relay lives shown below are the actual service values, not the guaranteed values. Replace the module well in advance since the actual switching life may be shorter than the one shown below.

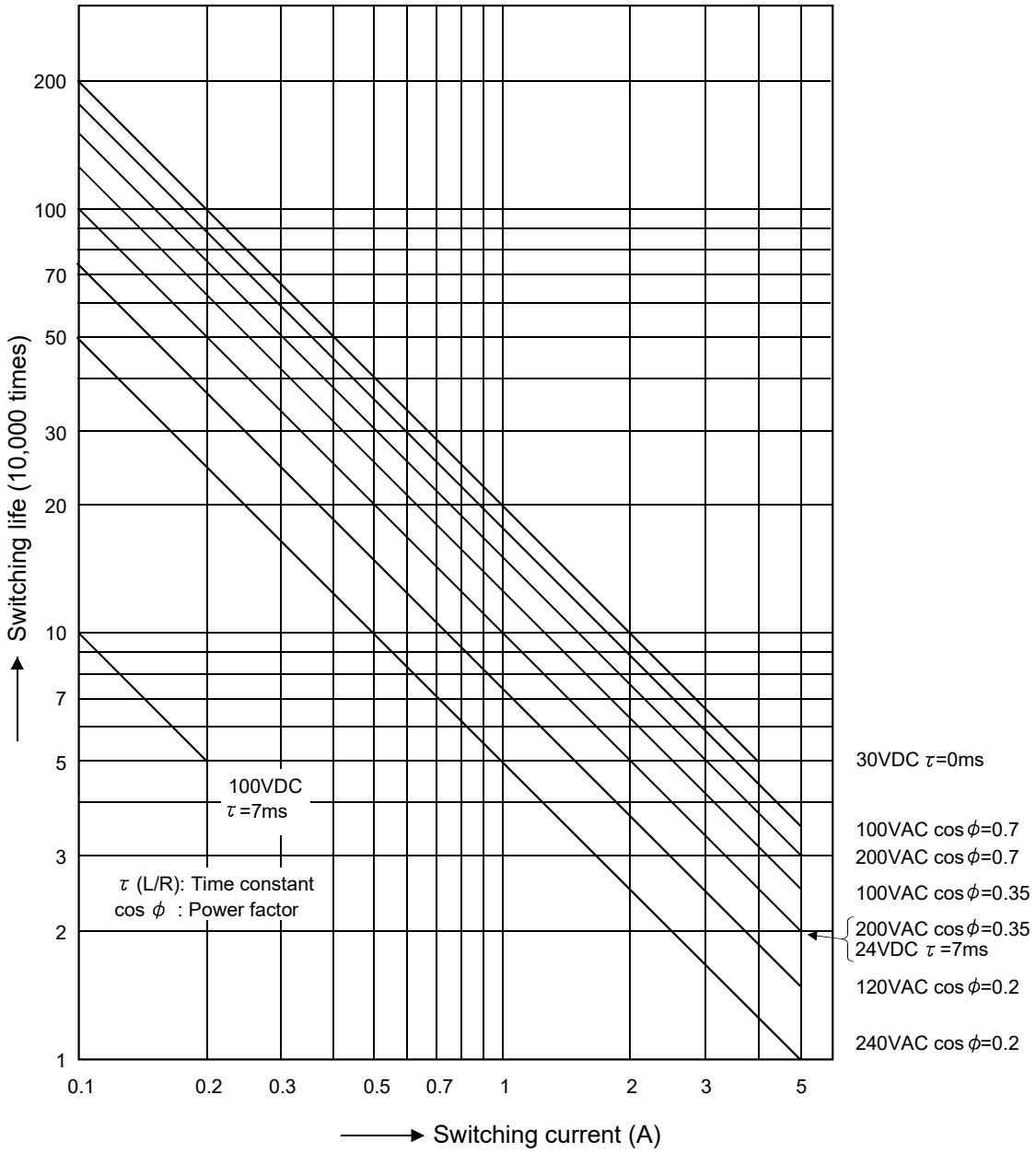

Operating environment	Switching life
Rated switching voltage/current load	100 thousand times
200VAC 1.5A, 240VAC 1A (COS ϕ =0.7)	100 thousand times
200VAC 0.4A, 240VAC 0.3A (COS ϕ =0.7)	300 thousand times
200VAC 1A, 240VAC 0.5A (COS ϕ =0.35)	100 thousand times
200VAC 0.3A, 240VAC 0.15A (COS ϕ =0.35)	300 thousand times
24VDC 1A, 100VDC 0.1A (L/R=7ms)	100 thousand times
24VDC 0.3A, 100VDC 0.03A (L/R=7ms)	300 thousand times

POINT

When using the module for the application in which the relay contact is frequently switched, the relay life span should be considered. It is recommended to use a triac output module.

(b) Measures against inrush current

The actual relay life may be significantly shortened compared to the one shown in (7)(a), depending on the type of a load connected and the characteristics of inrush current.

Also, the inrush current may cause contact welding.

Take the following measures to prevent shortening of the relay life and the contact welding.

- Select a load so that the inrush current will be within the rated current of the module.
- Connect an external relay that can withstand the inrush current.

The following table shows the relation between the load and the inrush current. Select a load so that the inrush current (i) and the rated current (io) will be within the rated switching current specified for the output module used.

The inrush current may flow for a longer time depending on the load.

Load type	Signal waveform diagram	Inrush current(i)/rated current (io)	Signal waveform diagram	Inrush current(i)/rated current (io)
Inductive load	Load of a solenoid 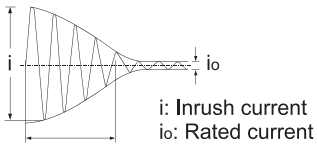	Approx. 10 to 20 times	Load of an electromagnetic contactor 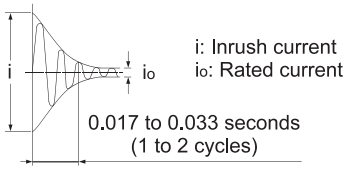	Approx. 3 to 10 times
Lamp load	Load of an incandescent bulb 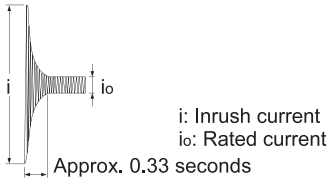	Approx. 3 to 10 times	Load of a mercury lamp 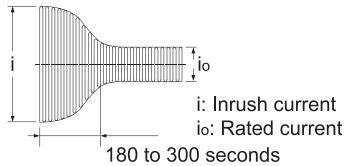	Approx. 3 times*1
	Load of a fluorescent 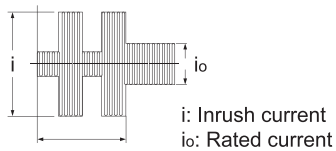	Approx. 5 to 10 times	—	—

(To the next page)

*1: Typical electric-discharge lamp circuit includes discharge tubes, transformers, choke coils, and capacitors. Therefore, note that the inrush current may flow 20 to 40 times as large as the rated current in the case of high power factor and low power impedance.

Load type	Signal waveform diagram	Inrush current(i)/rated current (io)	Signal waveform diagram	Inrush current(i)/rated current (io)
Capacitive load	Capacitive load*2 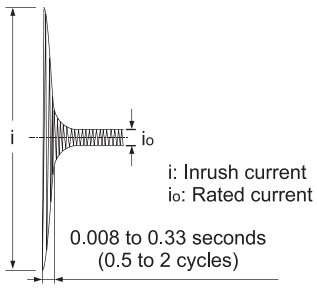 	Approx. 20 to 40 times	—	—

*2: When the wiring of the circuit is long, take care of the wire capacity.

(c) Measures against back EMF

Configure a contact protection circuit for extending the contact life, preventing noise when the contact is cut off, and suppressing the generation of carbide and nitric acid due to arc discharge.

An Incorrect contact protection circuit may cause contact welding.

Also, when using the contact protection circuit, the recovery time may be long.

The following table shows the representative examples of the contact protection circuit.

Circuit example		Method for selecting elements	Remarks
Capacitor + Resistor method (CR method)	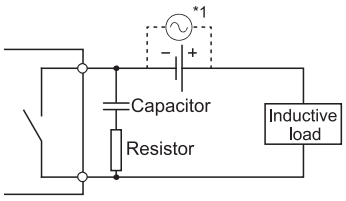	Refer to the following for constants of the capacitor and resistor. Note that the following values may differ depending on a nature of the load and a variation of characteristics of it. • Capacitor 0.5 to 1 (μF) against contact current of 1A • Resistor 0.5 to 1 (Ω)against contact voltage of 1V Use a capacitor whose withstand voltage is 200 to 300V. In AC circuit, use a capacitor having no polarity.	If a load is from a relay or solenoid, the recovery time delays. A capacitor suppresses electric discharge while a contact is off, and a resistor restricts a flow of current while a contact is on.
	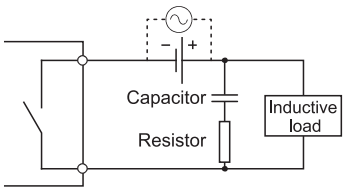		
Diode method	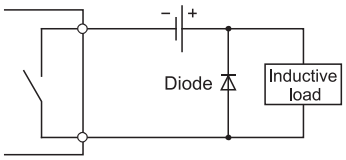	Use a diode whose reverse breakdown voltage is 10 times as high as the circuit voltage or more and whose forward current is twice as high as the load current or more.	The recovery time is later than the CR method.
Diode + Zener diode method	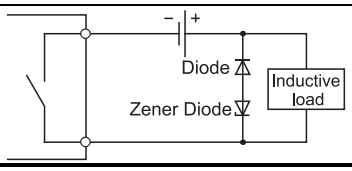	Use zener voltage for the zener diode equal to or more than the power supply voltage.	The diode method is effective when the recovery time is too late.

*1: When using AC power, impedance of CR must be larger enough than that of the load. (prevention of a malfunction due to leak current from the CR)

(To the next page)

Circuit example		Method for selecting elements	Remarks
Varistor method	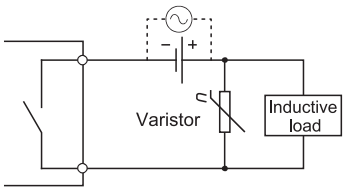	Select a cut voltage (Vc) for the varistor to meet the following condition. Multiply the value by root two for use of AC power. Vc > Power supply voltage × 1.5 (V) Note that when selecting an element whose Vc is too high, its effect will weaken.	The recovery time delays slightly.

POINT

(1) Avoid providing contact protection circuits shown below.
These circuits are effective for preventing an arc at shut-off. However, the contact welding may occur because the charge current flows to capacitor when the contact turns on or off.
A DC inductive load is usually harder for switching than a resistor load, but if a proper protection circuit is configured, the performance will be similar to the resistor load.

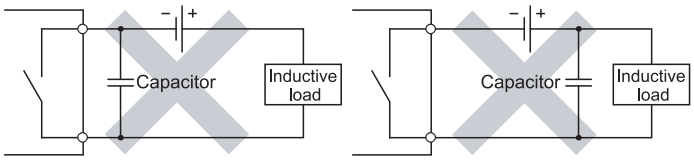

(2) A protection circuit must be provided closely to a load or contact (module). If their distance is far, the protection circuit may not be effective. Appropriate distance is within 50cm.

(8) Precautions for using the triac output module

Because of characteristics of a triac, a sudden change of voltage or current may cause unstable operations of a triac used for the triac output module.
Whether the voltage or current change causes a problem differs depending on an individual part (each triac), thus check the following when using the triac output module.

(a) Checking of the load current

When the current consumption is equal to or smaller than the minimum load current and the margin is low by using an inductive load such as a solenoid valve, a triac may not turn on or off properly. In that case, an action such as connecting a bleeder resistance is required.
For detail on actions, refer to Section 11.2.

(b) Precautions on a full-wave rectifier load

The load current of a full-wave rectifier load forms waves similar to rectangular waves as shown below.

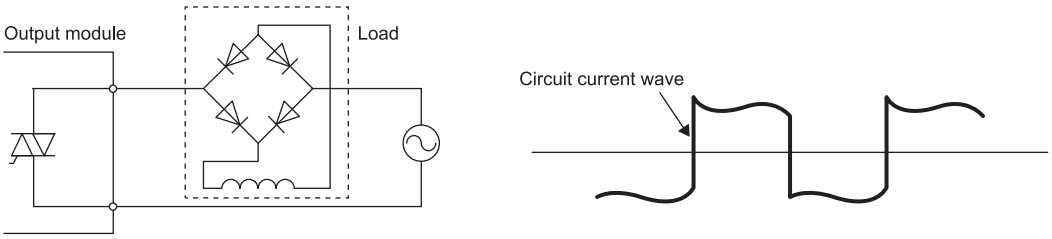

A triac may not operate properly if the current forms rectangular waves associated with sudden current changes. To avoid it, use a load with which the load current does not form rectangular waves.

(c) Measures for connecting an inductive load

To connect an inductive load, take measures to reduce noise to the side where the load is connected as shown below.

Circuit example		Method for selecting elements	Remarks
Varistor method	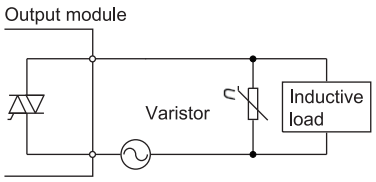	Select a cut voltage (Vc) for the varistor to meet the following condition. • Vc > Power supply voltage × 1.5(V) × √2 This method is not effective when the Vc is too high.	The recovery time delays slightly.

Circuit example		Method for selecting elements	Remarks
Capacitor + Resistor method (CR method)	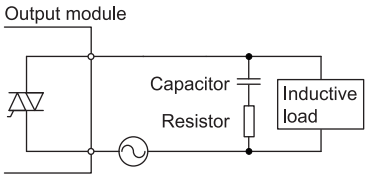	Refer to the following for constants of the capacitor and resistor. Note that the following values may differ depending on a nature of the load and a variation of characteristics of it. • Capacitor: 0.5 to 1 (μF) against load current of 1A • Resistor: 0.5 to 1(Ω) against power supply voltage of 1V Use a capacitor whose withstand voltage is equal to or more than the rated voltage. Use a capacitor having no polarity.	If a load is a relay or solenoid, the recovery time delays.

(d) Measures for connecting an inductive load (when installing a contact between the load and the output terminal)
To install a contact (such as an interlock) between the load and the output terminal, take measures to reduce noise as shown below.
Though measures (varistor method, capacitor + resistor method) are normally taken to the load side, in some cases, it is more efficient to take the measures to the module side considering the contact effect.

Circuit example		Method for selecting elements	Remarks
Varistor method	• Measure taken to the load side 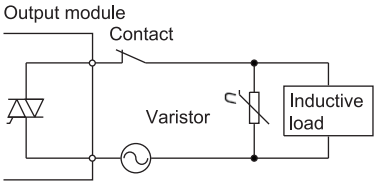 • Measure taken to the module side 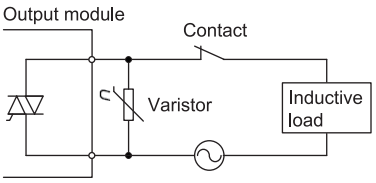	Select a cut voltage (Vc) for the varistor to meet the following condition. • Vc > Power supply voltage × 1.5(V) × √2 This method is not effective when the Vc is too high.	The recovery time delays slightly.

1.2.3 I/O combined module

(1) I/O numbers of I/O combined modules

There are two types of I/O combined modules:

- Module using same I/O numbers for input and output
  Since same number is used for input and output, the I/O numbers to be used can be saved.
- Module using sequential I/O numbers for input and output
  Since I/O assignments are the same for A series, it is useful when replacing modules from those of A series.

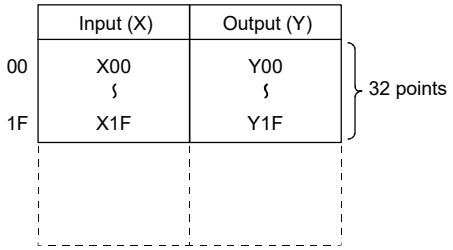

Module using same I/O numbers for input and output (QH42P)

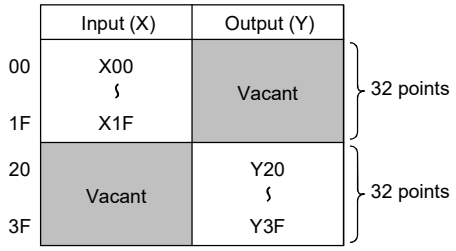

Module using sequential I/O numbers for input and output (QX41Y41P)

(2) Configuration of when an I/O combined module is used

For the QH42P, QX41Y41P, and QX48Y57, use them in the configuration below.

Product	Description	Precautions
CPU module	The module whose serial number (first 5 digits) is "01112" or later	-
GX Developer	SW4D5C-GPPW or earlier	• Use it with "Output" being set to the I/O assignment. • Input response time cannot be set. (fixed at 10ms)
	SW5D5C-GPPW or later	Use it with "I/O combined" being set to the I/O assignment.

For how to check the serial number of the CPU module, refer to the QCPU User's Manual (Hardware Design, Maintenance and Inspection).

1.2.4 I/O module with protection function

The overload protection function and overheat protection function of the following modules are explained below.

(1) QY40P, QY41P, QY42P, QX41Y41P, QH42P

Function	Description
Common (Overload and overheat protection functions)	• If an overcurrent due to overload keeps flowing, heat is generated and the overheat protection function is activated. • The functions are provided for protecting only the circuits inside the module. A load error, which causes an increase in temperature within the module, may deteriorate output elements or discolour the module case or printed circuit board. If a load error occurs, turn off the corresponding output immediately and eliminate the error cause.
Overload protection function	• The overload protection function is activated in units of 1 point at 1A to 3A/point. • The overload protection function returns to normal operation when the load becomes a rated load.
Overheat protection function	• The overheat protection function is activated in units of 1 point. • The overheat protection function automatically returns to normal operation after heat reduces.

(2) QY81P, QY82P

Function	Description
Common (Overload and overheat protection functions)	• If an overcurrent due to overload keeps flowing, heat is generated and the overheat protection function is activated. • The functions are provided for protecting only the circuits inside the module. A load error, which causes an increase in temperature within the module, may deteriorate output elements or discolour the module case or printed circuit board. If a load error occurs, turn off the corresponding output immediately and eliminate the error cause.
Overload protection function	• The overload protective function is activated in units of 1 point at 1A to 3A/point. • The overload protective function returns to normal operation when the load becomes a rated load.
Overheat protection function	• The overheat protection function is activated in units of 2 points. (It is activated in units of 2 points of Y0/Y1, Y2/Y3, ..., and when overheat protection is activated, 2 points of them are activated simultaneously. If an overheat status persists, heat is conducted, and which may activate another overheat protection function.) • If an output turns on at the activation of the overheat protection function, the actual output voltage oscillates between 0V and load voltage. At the load voltage of 24V, the average voltage during oscillation is approx. 7V. No oscillation occurs when the output is off at the activation of the overheat protection function. To ensure that the output is turned off at the activation of the overheat protection function, use an external load that turns off at 7V or more. • The overheat protective function automatically returns to normal operation after heat reduces.

1.2.5 Interrupt module

(1) If setting the response time during the interrupt input operation of QI60 or QX40H, QX70H, QX80H, and QX90H, use the module whose contents are shown below. The response time cannot be set with other contents (fixed at 0.2ms.).

Product	Description
CPU module	Product information "021120000000000-B" or later
GX Developer	SW6D5C-GPPW or later

For how to check product information of the CPU module, refer to the QCPU User's Manual (Hardware Design, Maintenance and Inspection).

1.2.6 Installation and wiring

(1) Solderless terminal with insulation sleeve
A solderless terminal with insulation sleeve cannot be used for a terminal block.
It is recommended that the junction of a solderless terminal and a cable should be covered up with a cable tag or an insulation tube.

(2) Applicable wire
Use wires of 0.3 to 0.75mm^2 core and 2.8mm OD max. to connect to the terminal block. When using a wire whose core is 0.75mm or more, it is preferable to use the spring clamp terminal block (Q6TE-18S, Q6TE-18SN).

(3) Tightening torque range
Tighten screws (such as a module fixing screw) within the following torque range.

Screw location	Tightening torque range
Module fixing screw (M3×12 screw)	0.36 to 0.48 N•m
Terminal block screw (M3 screw)	0.42 to 0.58 N•m
Terminal block mounting screw (M3.5 screw)	0.66 to 0.89 N•m
Connector screw (M2.6 screw)	0.20 to 0.29 N•m

1.3 Various Settings for I/O Module

Various settings for the I/O module can be made with GX Developer.
This section describes how to make the settings with GX Developer.

1.3.1 Setting of I/O response time

Set the I/O response time on the I/O assignment tab of PLC Parameter.

(1) For Input/I/O mix module
Select "Input" or "I/O mix" in "Type" combo box on the I/O assignment tab of PLC parameter. Then, click the "Detailed setting" button, and then select the input response time in "I/O response time" combo box.

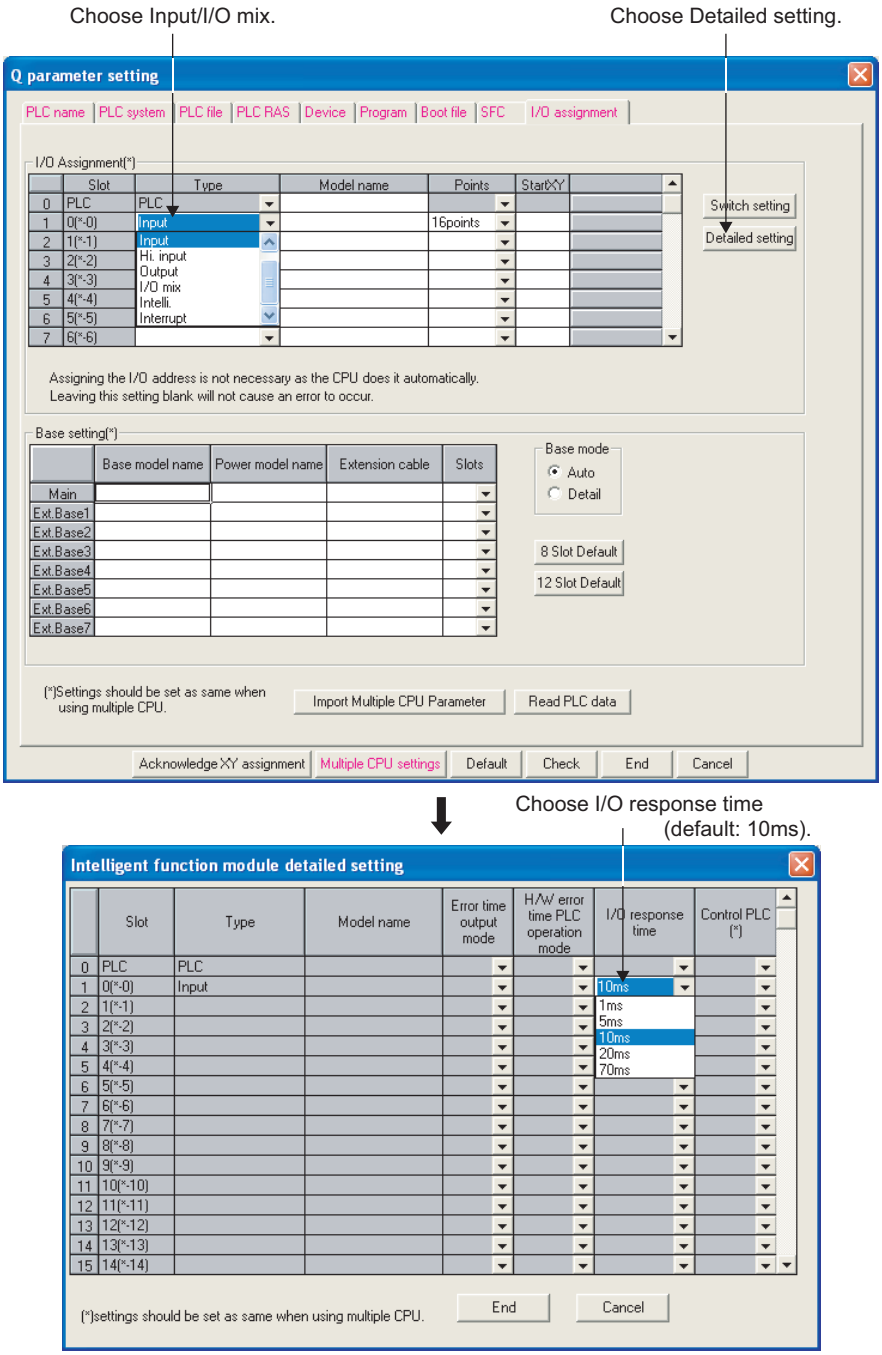

(2) For input module/QX40-S1, QX41-S1, QX42-S1, QX82-S1 and interrupt module/QI60

Select "Hi. input" or "Interrupt" in "Type" combo box on the I/O assignment tab of PLC parameter. Then, click the "Detailed setting" button, and then select the input response time in "I/O response time"*1 combo box.

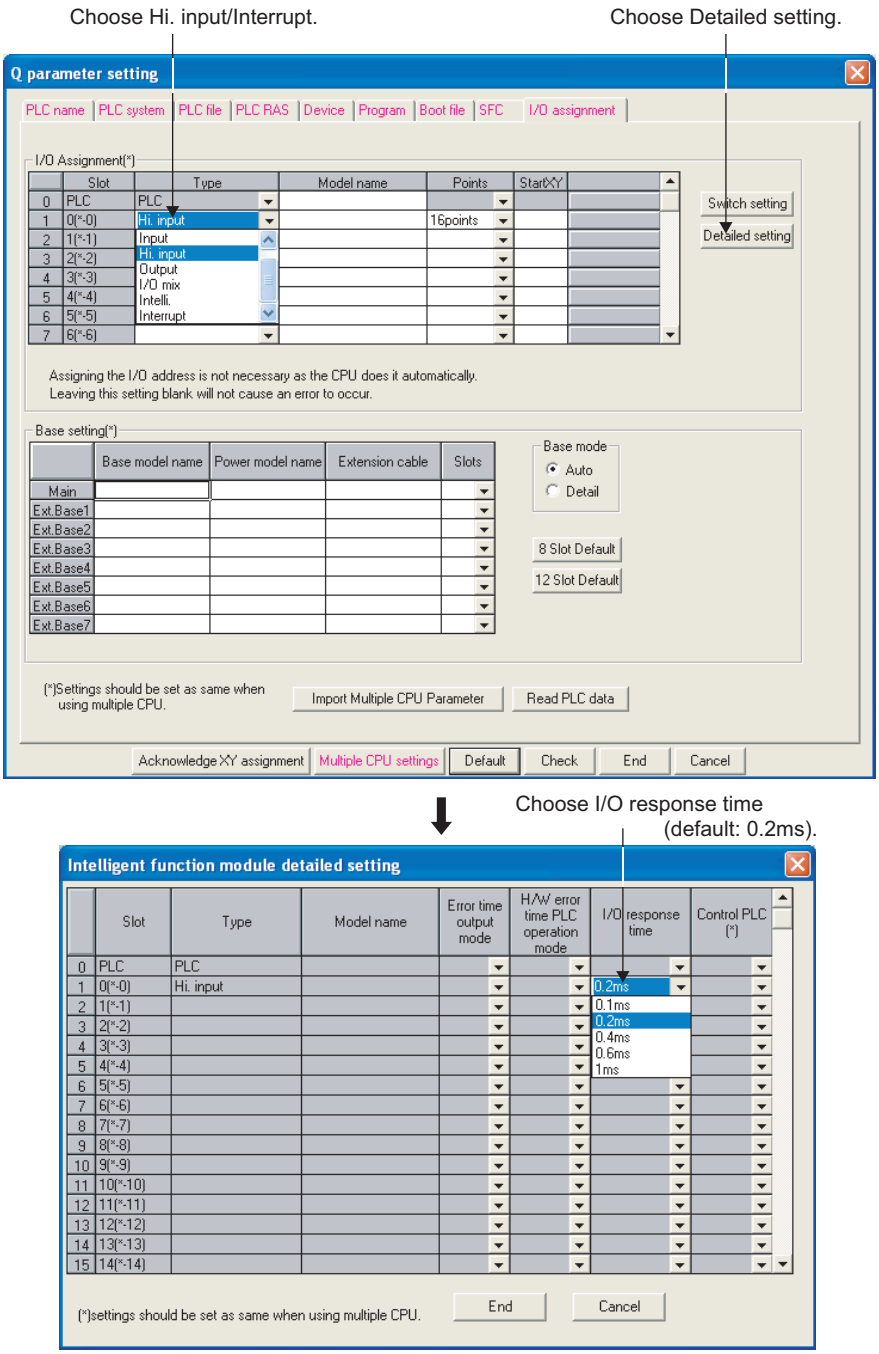

*1: When the actual response time differs from the setting value, refer to the specifications of the relevant input modules.

(3) For high-speed input module/QX40H, QX70H, QX80H, QX90H
Select "Hi.input" or "Interrupt", which is the same module type as the one selected with the high-speed input module switch, in "Type" combo box on the I/O assignment tab of PLC parameter.*1 Then, click the "Detailed setting" button, and then select the input response time in "I/O response time"*2 *3 combo box.

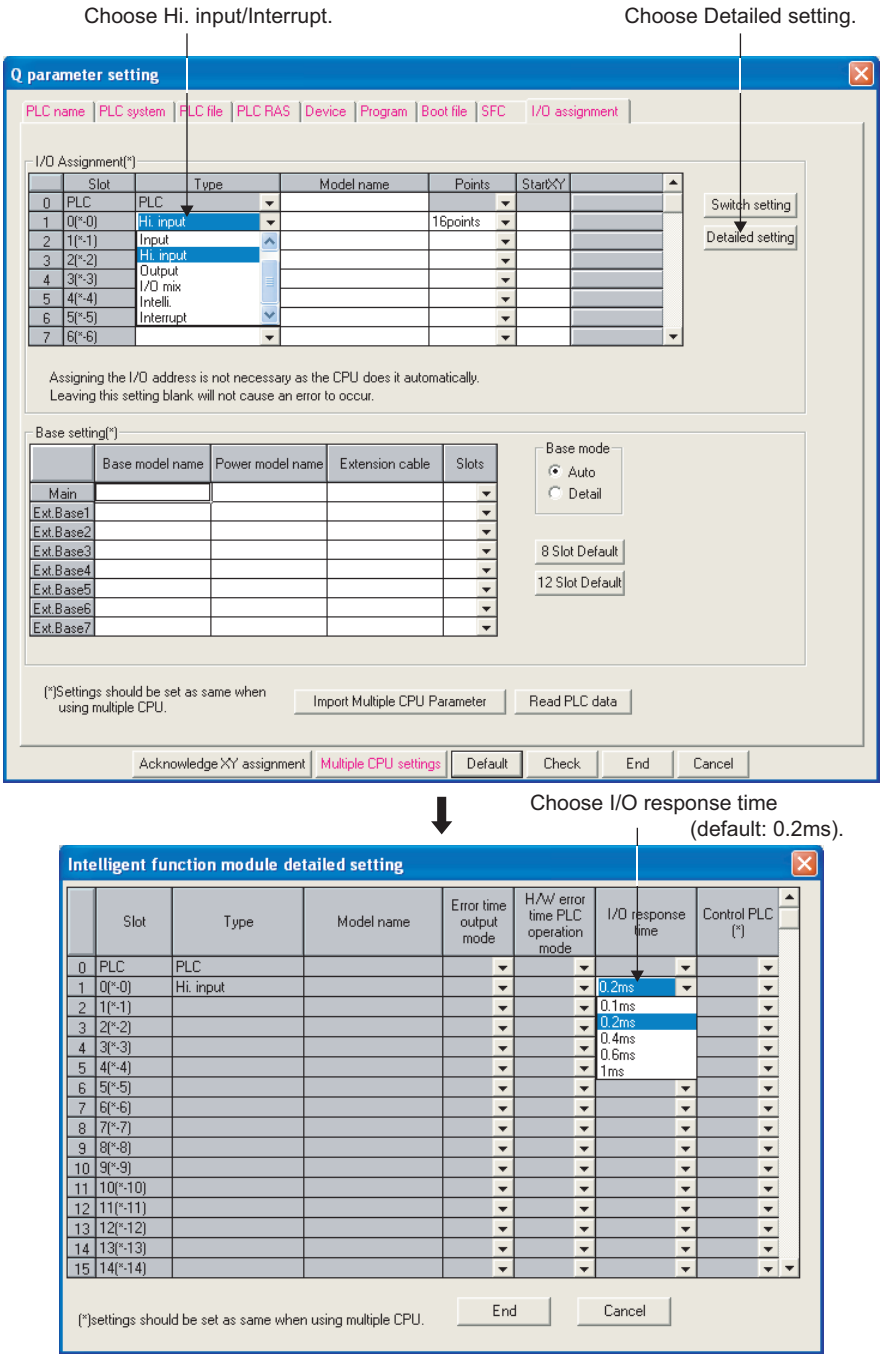

*1: If a different module type from the one selected by the function selector switch (switch 2) of the high-speed input module is selected, an error occurs.

*2: If the noise filter is disabled with the noise filter selector switch (switch 1) of the high-speed input module, the setting value is ignored.

*3: When the actual response time differs from the setting value, refer to the specifications of the relevant input modules.

1.3.2 Setting of error-time output mode

Set the error-time output mode on the I/O assignment tab of PLC parameter in GX Developer.
Select "Output" or "I/O mix" in the "Type" combo box on the I/O assignment tab of PLC parameter. Then, click the "Detailed setting" button, and then select "Clear" or "Hold" in the "Error time output mode" combo box.

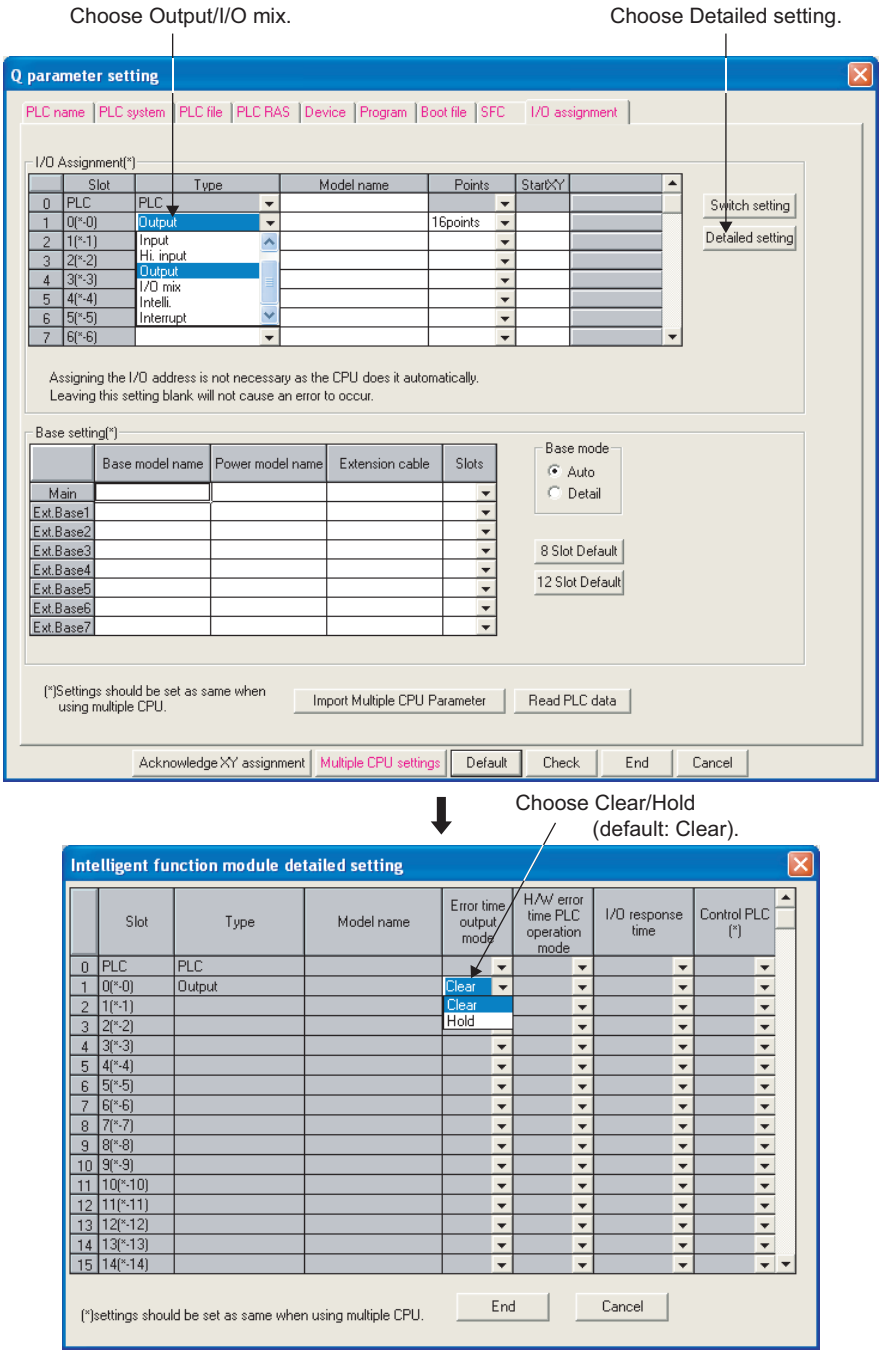

1.3.3 Switch setting of interrupt module

Perform the switch setting on the I/O assignment tab of PLC parameter when operating the interrupt input for QI60, QX40H, QX70H, QX80H, or QX90H.
Select "Interrupt" in the "Type" combo box on the I/O assignment tab of PLC parameter. Then, click the "Switch setting" button, and then select "HEX" in the "Input format" combo box. Lastly, set 0 (leading edge) or 1 (trailing edge) in the "Switch 1" box for the interrupt processing.

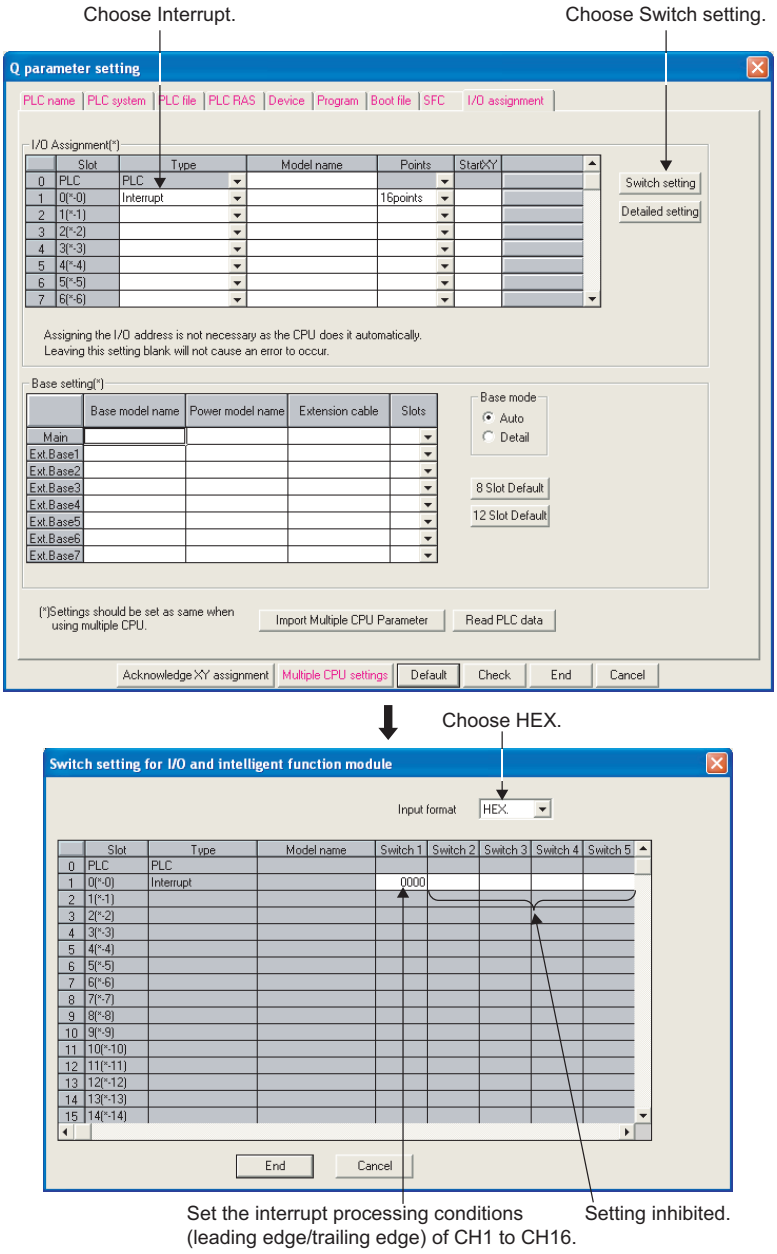

Set the interrupt processing condition with switch 1. The relationships between bits and inputs are as indicated below.

b15							to								b0
XF	XE	XD	XC	XB	XA	X9	X8	X7	X6	X5	X4	X3	X2	X1	X0

0: Leading edge, 1: Trailing edge

MEMO

2. INPUT MODULE SPECIFICATIONS

2.1 QX10 AC Input Module

Specifications \ Type		AC input module	
		QX10	Appearance
Number of input points		16 points	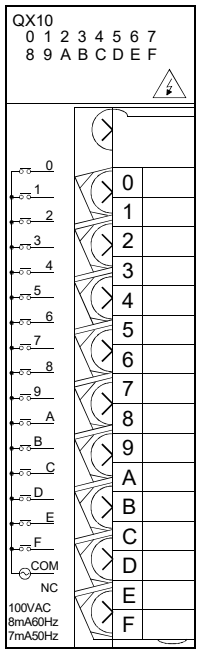
Isolation method		Photocoupler	
Rated input voltage, frequency		100-120VAC (+10/-15%) 50/60Hz (±3Hz)	
Input voltage distortion		Within 5% (Refer to section 1.2)	
Rated input current		Approx. 8mA (100VAC, 60Hz), approx. 7mA (100VAC, 50Hz)	
Input derating		Refer to the derating chart.	
Inrush current		Max. 200mA within 1ms (at 132VAC)	
ON voltage/ON current		80VAC or higher/5mA or higher (50Hz, 60Hz)	
OFF voltage/OFF current		30VAC or lower/1.7mA or lower (50Hz, 60Hz)	
Input impedance		Approx. 12kΩ (60Hz), approx. 15kΩ (50Hz)	
Response time	OFF to ON	15ms or less (100VAC 50Hz, 60Hz)	
	ON to OFF	20ms or less (100VAC 50Hz, 60Hz)	
Dielectric withstand voltage		1780VAC rms/3 cycles (altitude 2000m)	
Insulation resistance		10MΩ or more by insulation resistance tester	
Noise immunity		By noise simulator of 1500Vp-p noise voltage, 1μs noise width and 25 to 60Hz noise frequency	
		First transient noise IEC61000-4-4: 1kV	
Protection degree		IP1X	
Common terminal arrangement		16 points/common (common terminal: TB17)	
Number of occupied I/O points		16 points (I/O assignment is set as a 16-point input module.)	
Operation indicator		ON indication (LED)	
External connections		18-point terminal block (M3×6 screws)	
Applicable wire size		0.3 to 0.75mm² core (2.8mm OD max.)	
Applicable crimping terminal		R1.25-3 (Sleeved crimping terminals cannot be used.)	
Internal current consumption (5VDC)		50mA (TYP. all points ON)	
Weight		0.17kg	

Derating chart

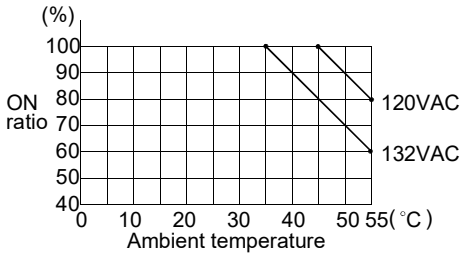

External connection

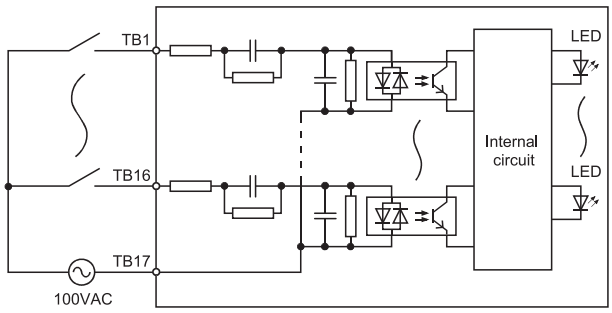

QX10 (16 points)

Terminal block No.	Signal name
TB1	X00
TB2	X01
TB3	X02
TB4	X03
TB5	X04
TB6	X05
TB7	X06
TB8	X07
TB9	X08
TB10	X09
TB11	X0A
TB12	X0B
TB13	X0C
TB14	X0D
TB15	X0E
TB16	X0F
TB17	COM
TB18	Vacant

2.2 QX10-TS AC Input Module

This module is a spring clamp terminal block type and an input module that has indicators for checking the insertion state of wire.

Specifications \ Type		AC input module	
		QX10-TS	Appearance
Number of input points		16 points	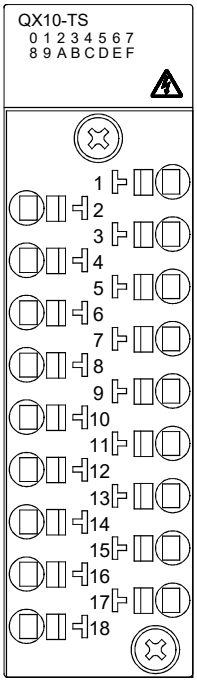
Isolation method		Photocoupler	
Rated input voltage, frequency		100-120VAC (+10/-15%) 50/60Hz (±3Hz)	
Input voltage distortion		Within 5% (Refer to section 1.2)	
Rated input current		Approx. 8mA (100VAC, 60Hz), approx. 7mA (100VAC, 50Hz)	
Input derating		Refer to the derating chart.	
Inrush current		Max. 200mA within 1ms (at 132VAC)	
ON voltage/ON current		80VAC or higher/5mA or higher (50Hz, 60Hz)	
OFF voltage/OFF current		30VAC or lower/1.7mA or lower (50Hz, 60Hz)	
Input impedance		Approx. 12kΩ (60Hz), approx. 15kΩ (50Hz)	
Response time	OFF to ON	15ms or less (100VAC 50Hz, 60Hz)	
	ON to OFF	20ms or less (100VAC 50Hz, 60Hz)	
Dielectric withstand voltage		1780VAC rms/3 cycles (altitude 2000m)	
Insulation resistance		10MΩ or more by insulation resistance tester	
Noise immunity		By noise simulator of 1500Vp-p noise voltage, 1 μs noise width and 25 to 60Hz noise frequency	
		First transient noise IEC61000-4-4: 1kV	
Protection degree		IP2X	
Common terminal arrangement		16 points/common (common terminal: TB17)	
Number of occupied I/O points		16 points (I/O assignment is set as a 16-point input module.)	
Operation indicator		ON indication (LED)	
External connections		Two-piece spring clamp terminal block	
Applicable wire size		0.3 to 2.0mm^2 core (22 to 15 AWG)	
Applicable crimping terminal		Refer to section 9.1	
Internal current consumption (5VDC)		50mA (TYP. all points ON)	
Weight		0.17kg	

Derating chart

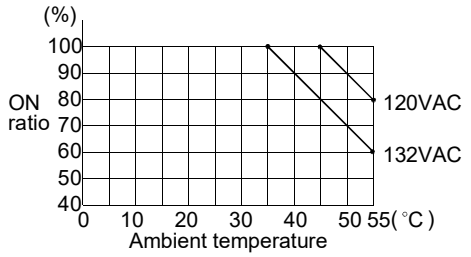

External connection

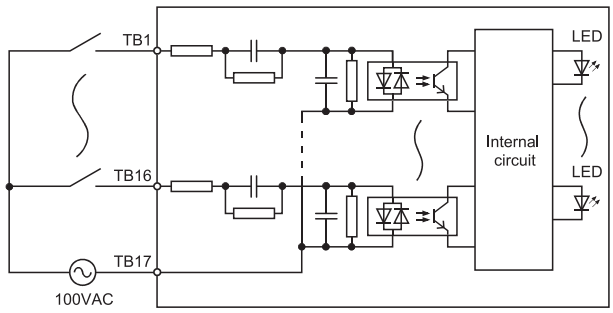

QX10-TS (16 points)

Terminal block No.	Signal name
TB1	X00
TB2	X01
TB3	X02
TB4	X03
TB5	X04
TB6	X05
TB7	X06
TB8	X07
TB9	X08
TB10	X09
TB11	X0A
TB12	X0B
TB13	X0C
TB14	X0D
TB15	X0E
TB16	X0F
TB17	COM
TB18	Vacant

2.3 QX28 AC Input Module

Specifications \ Type		AC input module	
		QX28	Appearance
Number of input points		8 points	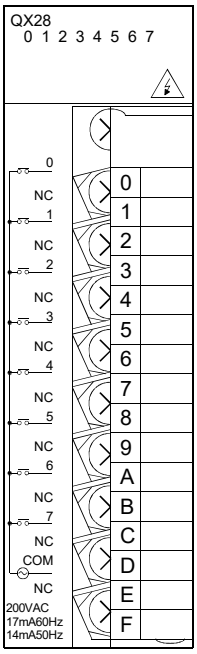
Isolation method		Photocoupler	
Rated input voltage, frequency		100-240VAC (+10/-15%) 50/60Hz (±3Hz)	
Input voltage distortion		Within 5% (Refer to section 1.2)	
Rated input current		Approx. 17mA (200VAC, 60Hz), approx. 14mA (200VAC, 50Hz) Approx. 8mA (100VAC, 60Hz), approx. 7mA (100VAC, 50Hz)	
Input derating		Refer to the derating chart.	
Inrush current		Max. 950mA within 1ms (at 264VAC)	
ON voltage/ON current		80VAC or higher/5mA or higher (50Hz, 60Hz)	
OFF voltage/OFF current		30VAC or lower/1.7mA or lower (50Hz, 60Hz)	
Input impedance		Approx. 12kΩ (60Hz), approx. 15kΩ (50Hz)	
Response time	OFF to ON	10ms or less (200VAC 50Hz, 60Hz)	
	ON to OFF	20ms or less (200VAC 50Hz, 60Hz)	
Dielectric withstand voltage		2830VAC rms/3 cycles (altitude 2000m)	
Insulation resistance		10MΩ or more by insulation resistance tester	
Noise immunity		By noise simulator of 1500Vp-p noise voltage, 1 μs noise width and 25 to 60Hz noise frequency	
		First transient noise IEC61000-4-4: 1kV	
Protection degree		IP1X	
Common terminal arrangement		8 points/common (common terminal: TB17)	
Number of occupied I/O points		16 points (I/O assignment is set as a 16-point input module.)	
Operation indicator		ON indication (LED)	
External connections		18-point terminal block (M3×6 screws)	
Applicable wire size		0.3 to 0.75mm^2 core (2.8mm OD max.)	
Applicable crimping terminal		R1.25-3 (Sleeved crimping terminals cannot be used.)	
Internal current consumption (5VDC)		50mA (TYP. all points ON)	
Weight		0.20kg	

Derating chart

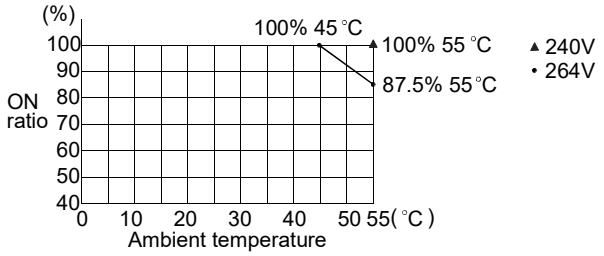

External connection

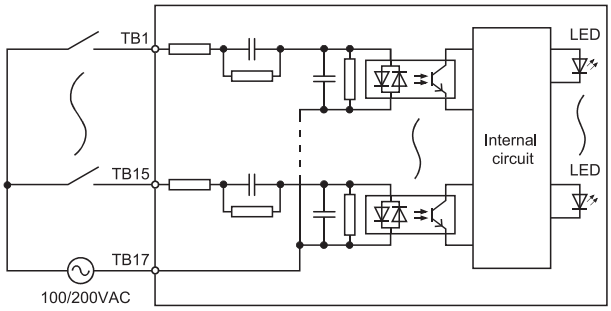

Terminal block No.	Signal name
TB1	X00
TB2	Vacant
TB3	X01
TB4	Vacant
TB5	X02
TB6	Vacant
TB7	X03
TB8	Vacant
TB9	X04
TB10	Vacant
TB11	X05
TB12	Vacant
TB13	X06
TB14	Vacant
TB15	X07
TB16	Vacant
TB17	COM
TB18	Vacant

2.4 QX40 DC Input Module (Positive Common Type)

Specifications \ Type		DC input module (Positive common type)	
		QX40	Appearance
Number of input points		16 points	
Isolation method		Photocoupler	
Rated input voltage		24VDC (+20/-15%, ripple ratio within 5%)	
Rated input current		Approx. 4mA	
Input derating		No	
ON voltage/ON current		19V or higher/3mA or higher	
OFF voltage/OFF current		11V or lower/1.7mA or lower	
Input impedance		Approx. 5.6kΩ	
Response time	OFF to ON	1ms/5ms/10ms/20ms/70ms or less (configured in PLC parameter) ＊1 (Default: 10ms)	
	ON to OFF	1ms/5ms/10ms/20ms/70ms or less (configured in PLC parameter) ＊1 (Default: 10ms)	
Dielectric withstand voltage		560VAC rms/3 cycles (altitude 2000m)	
Insulation resistance		10MΩ or more by insulation resistance tester	
Noise immunity		By noise simulator of 500Vp-p noise voltage, 1 μs noise width and 25 to 60Hz noise frequency	
		First transient noise IEC61000-4-4: 1kV	
Protection degree		IP2X	
Common terminal arrangement		16 points/common (common terminal: TB17)	
Number of occupied I/O points		16 points (I/O assignment is set as a 16-point input module.)	
Operation indicator		ON indication (LED)	
External connections		18-point terminal block (M3×6 screws)	
Applicable wire size		0.3 to 0.75mm² core (2.8mm OD max.)	
Applicable crimping terminal		R1.25-3 (Sleeved crimping terminals cannot be used.)	
Internal current consumption (5VDC)		50mA (TYP. all points ON)	
Weight		0.16kg	

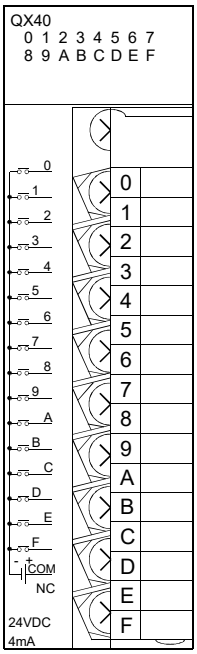

External connection

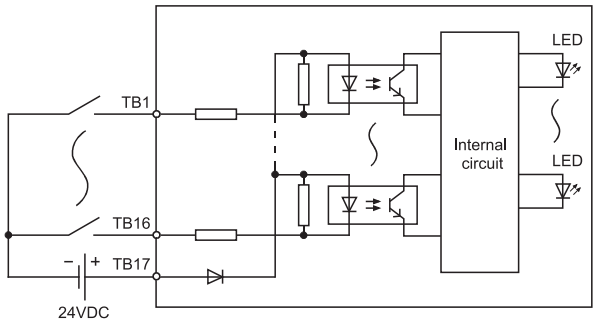

QX40 (16 points)

Terminal block No.	Signal name
TB1	X00
TB2	X01
TB3	X02
TB4	X03
TB5	X04
TB6	X05
TB7	X06
TB8	X07
TB9	X08
TB10	X09
TB11	X0A
TB12	X0B
TB13	X0C
TB14	X0D
TB15	X0E
TB16	X0F
TB17	COM
TB18	Vacant

＊1: For the setting method, refer to Section 1.3.1.

2.5 QX40-S1 DC Input Module (Positive Common Type)

Specifications \ Type			DC input module (Positive common type)				
			QX40-S1				Appearance
Number of input points			16 points				
Isolation method			Photocoupler				
Rated input voltage			24VDC (+20/-15%, ripple ratio within 5%)				
Rated input current			Approx. 6mA				
Input derating			No				
ON voltage/ON current			19V or higher/4.0mA or higher				
OFF voltage/OFF current			11V or lower/1.7mA or lower				
Input impedance			Approx. 3.9kΩ				
Response time	Set value ＊1		0.1	0.2	0.4	0.6	1
	OFF to ON	TYP.	0.05ms	0.15ms	0.30ms	0.55ms	1.05ms
		MAX.	0.10ms	0.20ms	0.40ms	0.60ms	1.20ms
	ON to OFF	TYP.	0.15ms	0.20ms	0.35ms	0.60ms	1.10ms
		MAX.	0.20ms	0.30ms	0.50ms	0.70ms	1.30ms
Dielectric withstand voltage			560VAC rms/3 cycles (altitude 2000m)				
Insulation resistance			10MΩ or more by insulation resistance tester				
Noise immunity			By noise simulator of 500Vp-p noise voltage, 1 μs noise width and 25 to 60Hz noise frequency				
			First transient noise IEC61000-4-4: 1kV				
Protection degree			IP2X				
Common terminal arrangement			16 points/common (common terminal: TB17)				
Number of occupied I/O points			16 points (I/O assignment is set as a 16-point high-speed input module.)				
Operation indicator			ON indication (LED)				
External connections			18-point terminal block (M3×6 screws)				
Applicable wire size			0.3 to 0.75mm² core (2.8mm OD max.)				
Applicable crimping terminal			R1.25-3 (Sleeved crimping terminals cannot be used.)				
Internal current consumption (5VDC)			60mA (TYP. all points ON)				
Weight			0.20kg				

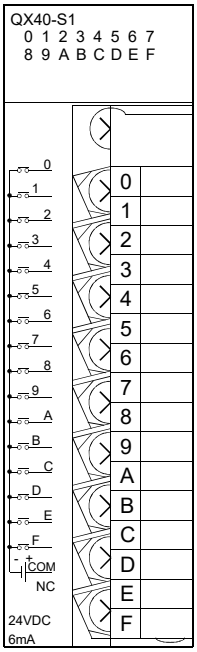

External connection

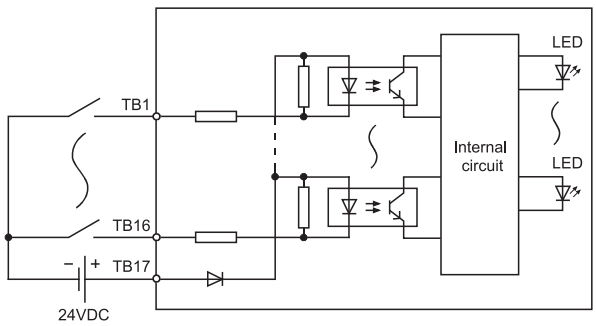

QX40-S1 (16 points)

Terminal block No.	Signal name
TB1	X00
TB2	X01
TB3	X02
TB4	X03
TB5	X04
TB6	X05
TB7	X06
TB8	X07
TB9	X08
TB10	X09
TB11	X0A
TB12	X0B
TB13	X0C
TB14	X0D
TB15	X0E
TB16	X0F
TB17	COM
TB18	Vacant

＊1: Configured in PLC parameter. (Default: 0.2ms)
A response time setting value can be changed in GX Developer (SW5D5C-GPPW or later).
For the setting method, refer to Section 1.3.1.

2.6 QX40-TS DC Input Module (Positive Common Type)

This module is a spring clamp terminal block type and an input module that has indicators for checking the insertion state of wire.

Specifications \ Type		DC input module (Positive common type)	
		QX40-TS	Appearance
Number of input points		16 points	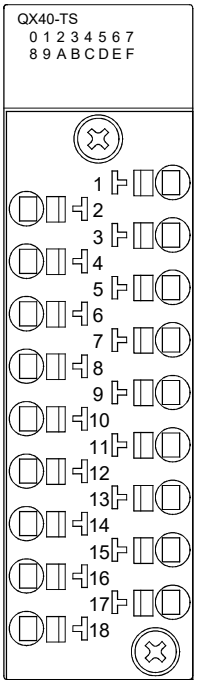
Isolation method		Photocoupler	
Rated input voltage		24VDC (+20/-15%, ripple ratio within 5%)	
Rated input current		Approx. 4mA	
Input derating		No	
ON voltage/ON current		19V or higher/3mA or higher	
OFF voltage/OFF current		11V or lower/1.7mA or lower	
Input impedance		Approx. 5.6kΩ	
Response time	OFF to ON	1ms/5ms/10ms/20ms/70ms or less (configured in PLC parameter) ＊1 (Default: 10ms)	
	ON to OFF	1ms/5ms/10ms/20ms/70ms or less (configured in PLC parameter) ＊1 (Default: 10ms)	
Dielectric withstand voltage		560VAC rms/3 cycles (altitude 2000m)	
Insulation resistance		10MΩ or more by insulation resistance tester	
Noise immunity		By noise simulator of 500Vp-p noise voltage, 1 μs noise width and 25 to 60Hz noise frequency	
		First transient noise IEC61000-4-4: 1kV	
Protection degree		IP2X	
Common terminal arrangement		16 points/common (common terminal: TB17)	
Number of occupied I/O points		16 points (I/O assignment is set as a 16-point input module.)	
Operation indicator		ON indication (LED)	
External connections		Two-piece spring clamp terminal block	
Applicable wire size		0.3 to 2.0mm^2 core (22 to 15 AWG)	
Applicable crimping terminal		Refer to section 9.1	
Internal current consumption (5VDC)		50mA (TYP. all points ON)	
Weight		0.16kg	

External connection

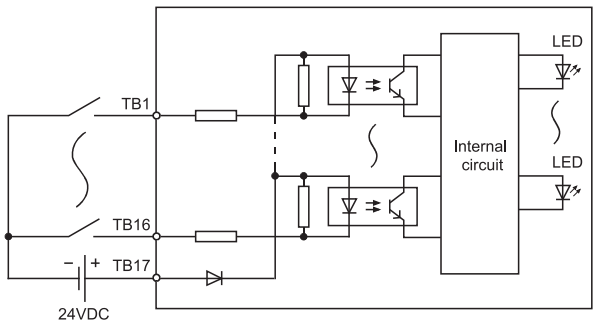

QX40-TS (16 points)

Terminal block No.	Signal name
TB1	X00
TB2	X01
TB3	X02
TB4	X03
TB5	X04
TB6	X05
TB7	X06
TB8	X07
TB9	X08
TB10	X09
TB11	X0A
TB12	X0B
TB13	X0C
TB14	X0D
TB15	X0E
TB16	X0F
TB17	COM
TB18	Vacant

＊1: For the setting method, refer to Section 1.3.1.

2.7 QX40H DC High-Speed Input Module (Positive Common Type)

Specifications \ Type			DC high-speed input module (Positive common type)						
			QX40H						Appearance
Number of input points			16 points						
Isolation method			Photocoupler						
Rated input voltage			24VDC (+20/-15%, ripple ratio within 5%)						
Rated input current			Approx. 6mA						
Input derating			Refer to the derating chart.						
ON voltage/ON current			15V or higher/3mA or higher						
OFF voltage/OFF current			5V or lower/1.6mA or lower						
Input impedance			Approx. 3.9kΩ						
Response time	SW1 (noise filter) ＊1		OFF	ON					
	Set value ＊2		Invalid	0.1	0.2	0.4	0.6	1	
	OFF to ON	TYP.	0ms ＊3	0.04ms	0.10ms	0.25ms	0.50ms	0.95ms	
		MAX.	- ＊3	0.05ms	0.15ms	0.30ms	0.60ms	1.00ms	
	ON to OFF	TYP.	0ms ＊3	0.04ms	0.10ms	0.25ms	0.50ms	0.95ms	
		MAX.	- ＊3	0.05ms	0.15ms	0.30ms	0.60ms	1.00ms	
Function setting	SW2＊4		OFF: Interrupt, ON: High-speed input						
Dielectric withstand voltage			560VAC rms/3 cycles (altitude 2000m)						
Insulation resistance			10MΩ or more by insulation resistance tester						
Noise immunity＊5			By noise simulator of 500Vp-p noise voltage, 1μs noise width and 25 to 60Hz noise frequency						
Protection degree			IP2X						
Common terminal arrangement			8 points/common (common terminal: TB9, TB18)						
Number of occupied I/O points			16 points (I/O assignment is set as a 16-point high-speed input module or 16-point interrupt module.) ＊4						
Interrupt processing condition			Set by Switch setting in GX Developer＊4 ＊6						
Operation indicator			ON indication (LED)						
External connections			18-point terminal block (M3×6 screws)						
Applicable wire size			0.3 to 0.75mm^2 core (2.8mm OD max.)						
Applicable crimping terminal			R1.25-3 (Sleeved crimping terminals cannot be used.)						
Internal current consumption (5VDC)			80mA (TYP. all points ON)						
Weight			0.16kg						

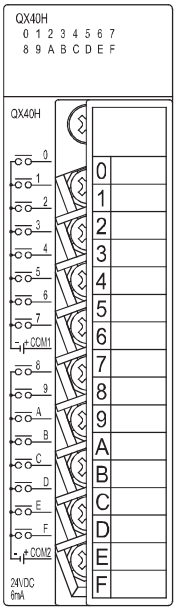

＊1: If the noise filter selector switch (switch 1) on the bottom of the module (refer to Chapter 10) is turned on, the noise filter takes effect.
The off-status noise filter disables I/O response time setting.
After switching on or off the switch 1, reset the power supply of the CPU module.

＊2: Set an input response time in "I/O response time" combo box of PLC parameter in GX Developer. (Default: 0.2ms)
A response time setting value can be changed in GX Developer (SW6D5C-GPPW or later).
For the setting details, refer to Section 1.3.1.

＊3: The actual response time is 5μs delay when turning on, 10μs delay when turning off, because the hardware response time is added.
For the details of the CPU overhead time, refer to manuals for the CPU module used (Function Explanation, Program Fundamentals).

＊4: The module function can be changed according to the status of the function selector switch (switch 2) on the bottom of the module (refer to Chapter 10).
ON: High-speed input
OFF: Interrupt
If the function selector switch (switch 2) setting is changed while the CPU module is in RUN, an error (error code: 2100) occurs.

＊5: Indicates the noise immunity when the noise filter takes effect (the noise filter selector switch (switch 1) is turned on).

＊6: For the setting method, refer to Section 1.3.3.

Derating chart

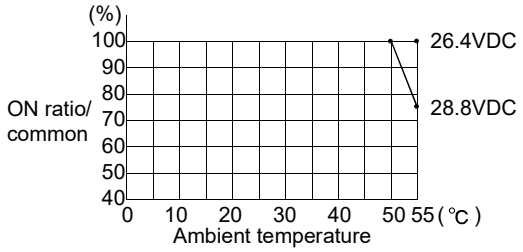

External connection

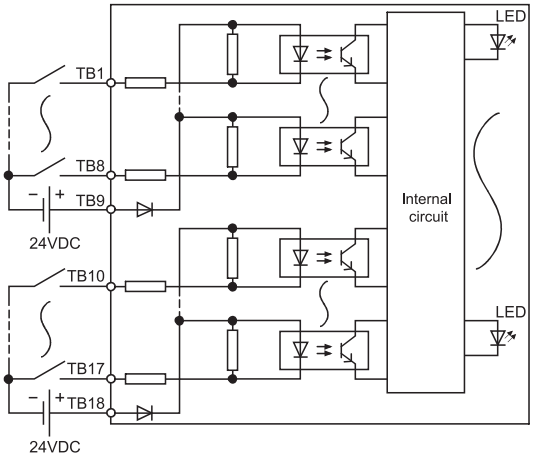

QX40H (16 points)

Terminal block No.	Signal name
TB1	X00
TB2	X01
TB3	X02
TB4	X03
TB5	X04
TB6	X05
TB7	X06
TB8	X07
TB9	COM1
TB10	X08
TB11	X09
TB12	X0A
TB13	X0B
TB14	X0C
TB15	X0D
TB16	X0E
TB17	X0F
TB18	COM2

2.8 QX41 DC Input Module (Positive Common Type)

Specifications \ Type		DC input module (Positive common type) QX41	Appearance
Number of input points		32 points	
Isolation method		Photocoupler	
Rated input voltage		24VDC (+20/-15%, ripple ratio within 5%)	
Rated input current		Approx. 4mA	
Input derating		Refer to the derating chart.	
ON voltage/ON current		19V or higher/3mA or higher	
OFF voltage/OFF current		11V or lower/1.7mA or lower	
Input impedance		Approx. 5.6kΩ	
Response time	OFF to ON	1ms/5ms/10ms/20ms/70ms or less (configured in PLC parameter) ＊1 (Default: 10ms)	
	ON to OFF	1ms/5ms/10ms/20ms/70ms or less (configured in PLC parameter) ＊1 (Default: 10ms)	
Dielectric withstand voltage		560VAC rms/3 cycles (altitude 2000m)	
Insulation resistance		10MΩ or more by insulation resistance tester	
Noise immunity		By noise simulator of 500Vp-p noise voltage, 1 μs noise width and 25 to 60Hz noise frequency	
		First transient noise IEC61000-4-4: 1kV	
Protection degree		IP2X	
Common terminal arrangement		32 points/common (common terminal: B01, B02)	
Number of occupied I/O points		32 points (I/O assignment is set as a 32-point input module.)	
Operation indicator		ON indication (LED)	
External connections		40-pin connector	
Applicable wire size		0.088 to 0.3mm² (For A6CON1 or A6CON4) ＊2	
Applicable connector		A6CON1, A6CON2, A6CON3, A6CON4 (optional)	
Applicable connector/terminal block converter module		A6TBXY36, A6TBXY54, A6TBX70	
Internal current consumption (5VDC)		75mA (TYP. all points ON) (0.08A is shown on the rating plate of the module.)	
Weight		0.15kg	

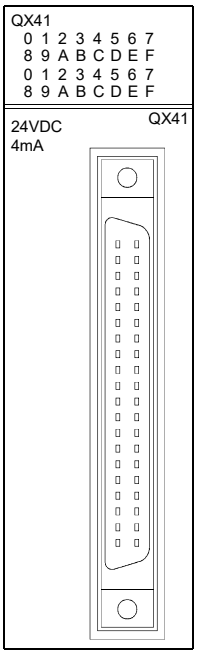

Derating chart

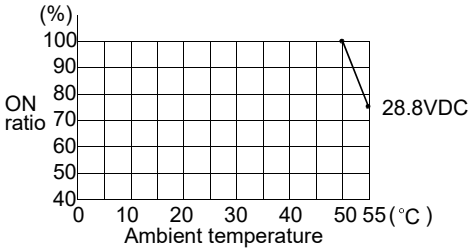

External connection

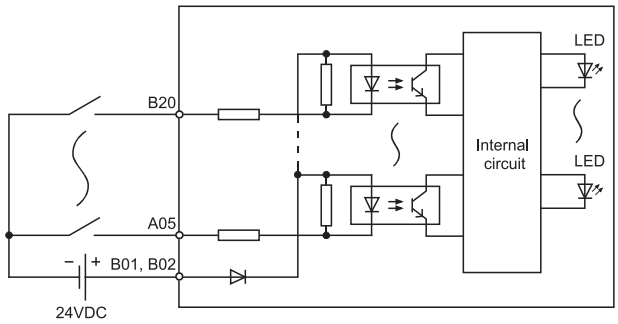

Pin-Outs

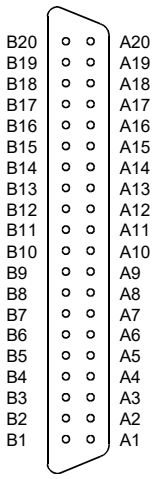

Module front view

Pin No.	Signal No.	Pin No.	Signal No.
B20	X00	A20	X10
B19	X01	A19	X11
B18	X02	A18	X12
B17	X03	A17	X13
B16	X04	A16	X14
B15	X05	A15	X15
B14	X06	A14	X16
B13	X07	A13	X17
B12	X08	A12	X18
B11	X09	A11	X19
B10	X0A	A10	X1A
B09	X0B	A09	X1B
B08	X0C	A08	X1C
B07	X0D	A07	X1D
B06	X0E	A06	X1E
B05	X0F	A05	X1F
B04	Vacant	A04	Vacant
B03	Vacant	A03	Vacant
B02	COM	A02	Vacant
B01	COM	A01	Vacant

＊1: For the setting method, refer to Section 1.3.1.

＊2: When using A6CON2 or A6CON3, refer to Chapter 7.

2.9 QX41-S1 DC Input Module (Positive Common Type)

Specifications \ Type			DC input module (Positive common type)				
			QX41-S1				Appearance
Number of input points			32 points				
Isolation method			Photocoupler				
Rated input voltage			24VDC (+20/-15%, ripple ratio within 5%)				
Rated input current			Approx. 4mA				
Input derating			Refer to the derating chart.				
ON voltage/ON current			19V or higher/3.0mA or higher				
OFF voltage/OFF current			9.5V or lower/1.5mA or lower				
Input impedance			Approx. 5.6kΩ				
Response time	Set value ＊1		0.1	0.2	0.4	0.6	1
	OFF to ON	TYP.	0.05ms	0.15ms	0.30ms	0.55ms	1.05ms
		MAX.	0.12ms	0.20ms	0.40ms	0.60ms	1.20ms
	ON to OFF	TYP.	0.15ms	0.20ms	0.35ms	0.60ms	1.10ms
		MAX.	0.20ms	0.30ms	0.50ms	0.70ms	1.30ms
Dielectric withstand voltage			560VAC rms/3 cycles (altitude 2000m)				
Insulation resistance			10MΩ or more by insulation resistance tester				
Noise immunity			By noise simulator of 500Vp-p noise voltage, 1 μs noise width and 25 to 60Hz noise frequency				
			First transient noise IEC61000-4-4: 1kV				
Protection degree			IP2X				
Common terminal arrangement			32 points/common (common terminal: B01, B02)				
Number of occupied I/O points			32 points (I/O assignment is set as a 32-point high-speed input module.)				
Operation indicator			ON indication (LED)				
External connections			40-pin connector				
Applicable wire size			0.088 to 0.3mm2 (For A6CON1 or A6CON4) ＊2				
Applicable connector			A6CON1, A6CON2, A6CON3, A6CON4 (optional)				
Applicable connector/terminal block converter module			A6TBXY36, A6TBXY54, A6TBX70				
Internal current consumption (5VDC)			75mA (TYP. all points ON) (0.08A is shown on the rating plate of the module.)				
Weight			0.15kg				

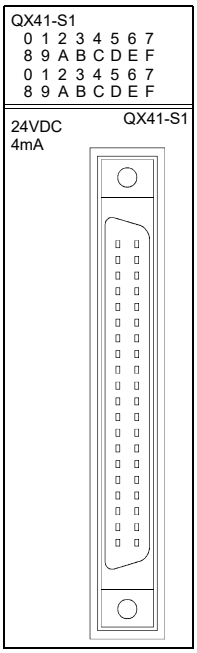

＊1: Configured in PLC parameter. (Default: 0.2ms)
A response time setting value can be changed in GX Developer (SW5D5C-GPPW or later).
For the setting method, refer to Section 1.3.1.

＊2: When using A6CON2 or A6CON3, refer to Chapter 7.

Derating chart

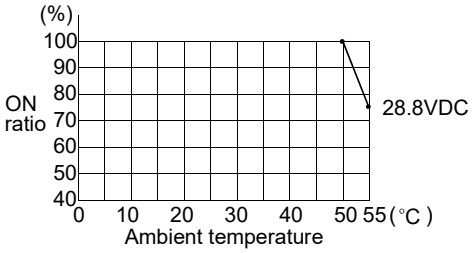

External connection

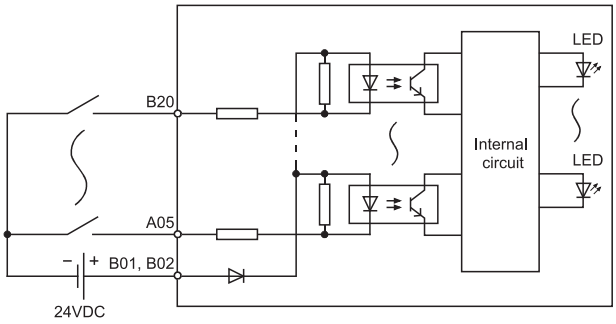

Pin-Outs

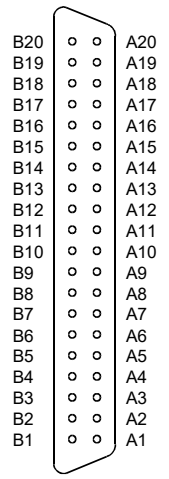

Module front view

Pin No.	Signal No.	Pin No.	Signal No.
B20	X00	A20	X10
B19	X01	A19	X11
B18	X02	A18	X12
B17	X03	A17	X13
B16	X04	A16	X14
B15	X05	A15	X15
B14	X06	A14	X16
B13	X07	A13	X17
B12	X08	A12	X18
B11	X09	A11	X19
B10	X0A	A10	X1A
B09	X0B	A09	X1B
B08	X0C	A08	X1C
B07	X0D	A07	X1D
B06	X0E	A06	X1E
B05	X0F	A05	X1F
B04	Vacant	A04	Vacant
B03	Vacant	A03	Vacant
B02	COM	A02	Vacant
B01	COM	A01	Vacant

2.10 QX41-S2 DC Input Module (Positive Common Type)

Specifications \ Type		DC input module (Positive common type)	
		QX41-S2	Appearance
Number of input points		32 points	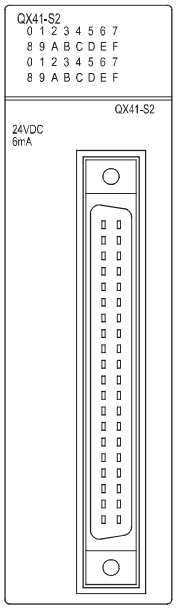
Isolation method		Photocoupler	
Rated input voltage		24VDC (+20/-15%, ripple ratio within 5%)	
Rated input current		Approx. 6mA	
Input derating		Refer to the derating chart.	
ON voltage/ON current		15V or higher/3mA or higher	
OFF voltage/OFF current		5V or lower/1.7mA or lower	
Input impedance		Approx. 3.6kΩ	
Response time	OFF to ON	1ms/5ms/10ms/20ms/70ms or less (configured in PLC parameter) ＊1 (Default: 10ms)	
	ON to OFF	1ms/5ms/10ms/20ms/70ms or less (configured in PLC parameter) ＊1 (Default: 10ms)	
Dielectric withstand voltage		560VAC rms/3 cycles (altitude 2000m)	
Insulation resistance		10MΩ or more by insulation resistance tester	
Noise immunity		By noise simulator of 500Vp-p noise voltage, 1μs noise width and 25 to 60Hz noise frequency	
		First transient noise IEC61000-4-4: 1kV	
Protection degree		IP2X	
Common terminal arrangement		32 points/common (common terminal: B01, B02)	
Number of occupied I/O points		32 points (I/O assignment is set as a 32-point input module.)	
Operation indicator		ON indication (LED)	
External connections		40-pin connector	
Applicable wire size		0.088 to 0.3mm2 (For A6CON1 or A6CON4) ＊2	
Applicable connector		A6CON1, A6CON2, A6CON3, A6CON4 (optional)	
Applicable connector/terminal block converter module		A6TBXY36, A6TBXY54, A6TBX70	
Internal current consumption (5VDC)		75mA (TYP. all points ON) (0.08A is shown on the rating plate of the module.)	
Weight		0.15kg	

Derating chart

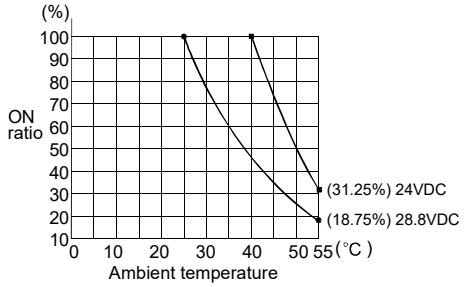

External connection

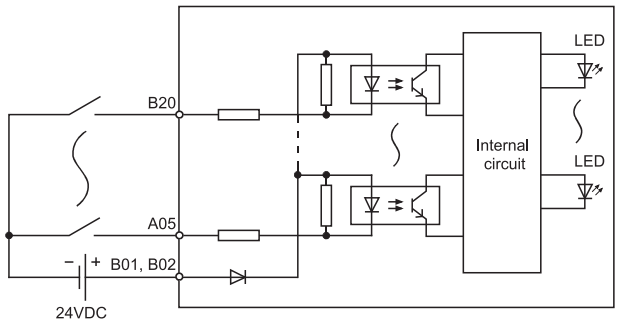

Pin-Outs

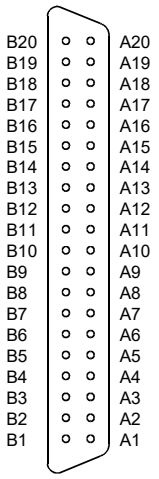

Module front view

Pin No.	Signal No.	Pin No.	Signal No.
B20	X00	A20	X10
B19	X01	A19	X11
B18	X02	A18	X12
B17	X03	A17	X13
B16	X04	A16	X14
B15	X05	A15	X15
B14	X06	A14	X16
B13	X07	A13	X17
B12	X08	A12	X18
B11	X09	A11	X19
B10	X0A	A10	X1A
B09	X0B	A09	X1B
B08	X0C	A08	X1C
B07	X0D	A07	X1D
B06	X0E	A06	X1E
B05	X0F	A05	X1F
B04	Vacant	A04	Vacant
B03	Vacant	A03	Vacant
B02	COM	A02	Vacant
B01	COM	A01	Vacant

＊1: For the setting method, refer to Section 1.3.1.

＊2: When using A6CON2 or A6CON3, refer to Chapter 7.

2.11 QX42 DC Input Module (Positive Common Type)

Specifications \ Type		DC input module (Positive common type)	
		QX42	Appearance
Number of input points		64 points	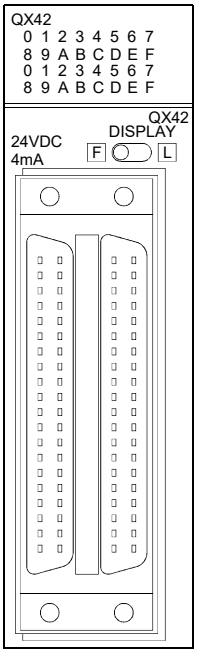
Isolation method		Photocoupler	
Rated input voltage		24VDC (+20/-15%, ripple ratio within 5%)	
Rated input current		Approx. 4mA	
Input derating		Refer to the derating chart.	
ON voltage/ON current		19V or higher/3mA or higher	
OFF voltage/OFF current		11V or lower/1.7mA or lower	
Input impedance		Approx. 5.6kΩ	
Response time	OFF to ON	1ms/5ms/10ms/20ms/70ms or less (configured in PLC parameter) ＊1 (Default: 10ms)	
	ON to OFF	1ms/5ms/10ms/20ms/70ms or less (configured in PLC parameter) ＊1 (Default: 10ms)	
Dielectric withstand voltage		560VAC rms/3 cycles (altitude 2000m)	
Insulation resistance		10MΩ or more by insulation resistance tester	
Noise immunity		By noise simulator of 500Vp-p noise voltage, 1 μs noise width and 25 to 60Hz noise frequency	
		First transient noise IEC61000-4-4: 1kV	
Protection degree		IP2X	
Common terminal arrangement		32 points/common (common terminal: 1B01, 1B02, 2B01, 2B02)	
Number of occupied I/O points		64 points (I/O assignment is set as a 64-point input module.)	
Operation indicator		ON indication (LED), 32 point switch-over using switch	
External connections		40-pin connector	
Applicable wire size		0.088 to 0.3mm^2 (For A6CON1 or A6CON4) ＊2	
Applicable connector		A6CON1, A6CON2, A6CON3, A6CON4 (optional)	
Applicable connector/terminal block converter module		A6TBXY36, A6TBXY54, A6TBX70	
Internal current consumption (5VDC)		90mA (TYP. all points ON)	
Weight		0.18kg	

＊1: For the setting method, refer to Section 1.3.1.
＊2: When using A6CON2 or A6CON3, refer to Chapter 7.

Derating chart

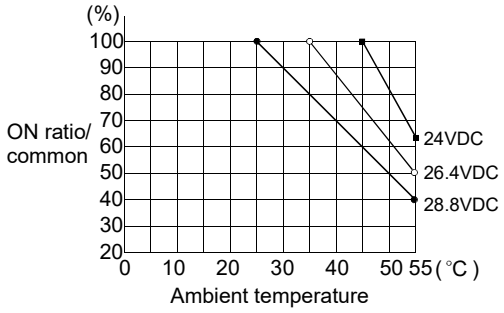

External connection

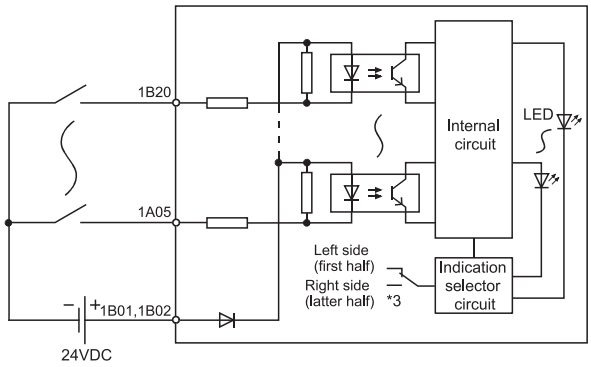

The above diagram shows the first half of 32 points (F).
The latter half of 32 points (L) are similar.

Pin-Outs

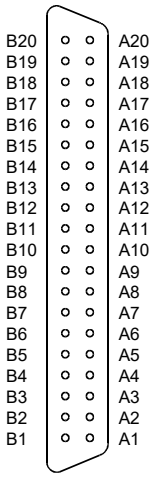

Module front view

Pin No. ＊4	Signal No.	Pin No. ＊4	Signal No.	Pin No. ＊4	Signal No.	Pin No. ＊4	Signal No.
1B20	X00	1A20	X10	2B20	X20	2A20	X30
1B19	X01	1A19	X11	2B19	X21	2A19	X31
1B18	X02	1A18	X12	2B18	X22	2A18	X32
1B17	X03	1A17	X13	2B17	X23	2A17	X33
1B16	X04	1A16	X14	2B16	X24	2A16	X34
1B15	X05	1A15	X15	2B15	X25	2A15	X35
1B14	X06	1A14	X16	2B14	X26	2A14	X36
1B13	X07	1A13	X17	2B13	X27	2A13	X37
1B12	X08	1A12	X18	2B12	X28	2A12	X38
1B11	X09	1A11	X19	2B11	X29	2A11	X39
1B10	X0A	1A10	X1A	2B10	X2A	2A10	X3A
1B09	X0B	1A09	X1B	2B09	X2B	2A09	X3B
1B08	X0C	1A08	X1C	2B08	X2C	2A08	X3C
1B07	X0D	1A07	X1D	2B07	X2D	2A07	X3D
1B06	X0E	1A06	X1E	2B06	X2E	2A06	X3E
1B05	X0F	1A05	X1F	2B05	X2F	2A05	X3F
1B04	Vacant	1A04	Vacant	2B04	Vacant	2A04	Vacant
1B03	Vacant	1A03	Vacant	2B03	Vacant	2A03	Vacant
1B02	COM1	1A02	Vacant	2B02	COM2	2A02	Vacant
1B01	COM1	1A01	Vacant	2B01	COM2	2A01	Vacant

＊3: Selection of left-hand (F) side provides the first half (X00 to X1F) LED indications, and selection of right-hand (L) side provides the latter half (X20 to X3F) LED indications.

＊4: Pin number of 1 □□□ indicates that of the left-hand side connector, and pin number of 2 □□□ indicates that of the right-hand side connector.

2.12 QX42-S1 DC Input Module (Positive Common Type)

Specifications \ Type			DC input module (Positive common type)				
			QX42-S1				Appearance
Number of input points			64 points				
Isolation method			Photocoupler				
Rated input voltage			24VDC (+20/-15%, ripple ratio within 5%)				
Rated input current			Approx. 4mA				
Input derating			Refer to the derating chart.				
ON voltage/ON current			19V or higher/3.0mA or higher				
OFF voltage/OFF current			9.5V or lower/1.5mA or lower				
Input impedance			Approx. 5.6kΩ				
Response time	Set value ＊1		0.1	0.2	0.4	0.6	1
	OFF to ON	TYP.	0.05ms	0.15ms	0.30ms	0.55ms	1.05ms
		MAX.	0.12ms	0.20ms	0.40ms	0.60ms	1.20ms
	ON to OFF	TYP.	0.15ms	0.20ms	0.35ms	0.60ms	1.10ms
		MAX.	0.20ms	0.30ms	0.50ms	0.70ms	1.30ms
Dielectric withstand voltage			560VAC rms/3 cycles (altitude 2000m)				
Insulation resistance			10MΩ or more by insulation resistance tester				
Noise immunity			By noise simulator of 500Vp-p noise voltage, 1 μs noise width and 25 to 60Hz noise frequency				
			First transient noise IEC61000-4-4: 1kV				
Protection degree			IP2X				
Common terminal arrangement			32 points/common (common terminal: 1B01, 1B02, 2B01, 2B02)				
Number of occupied I/O points			64 points (I/O assignment is set as a 64-point high-speed input module.)				
Operation indicator			ON indication (LED), 32 point switch-over using switch				
External connections			40-pin connector				
Applicable wire size			0.088 to 0.3mm2 (For A6CON1 or A6CON4) ＊2				
Applicable connector			A6CON1, A6CON2, A6CON3, A6CON4 (optional)				
Applicable connector/terminal block converter module			A6TBXY36, A6TBXY54, A6TBX70				
Internal current consumption (5VDC)			90mA (TYP. all points ON)				
Weight			0.18kg				

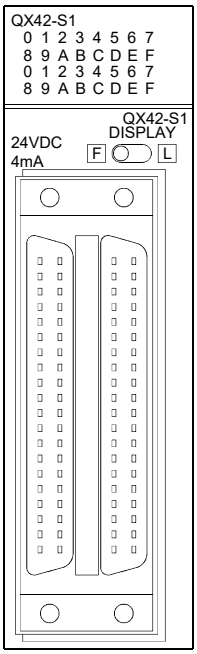

＊1: Configured in PLC parameter. (Default: 0.2ms)
A response time setting value can be changed in GX Developer (SW5D5C-GPPW or later).
For the setting method, refer to Section 1.3.1.

＊2: When using A6CON2 or A6CON3, refer to Chapter 7.

Derating chart

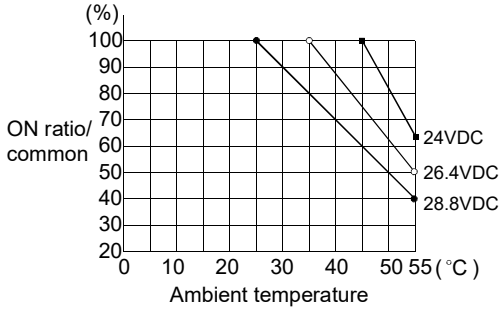

External connection

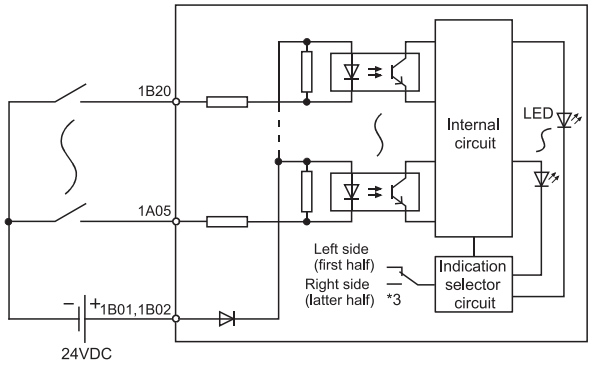

Pin-Outs

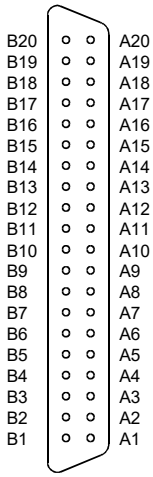

Module front view

Pin No. ＊4	Signal No.	Pin No. ＊4	Signal No.	Pin No. ＊4	Signal No.	Pin No. ＊4	Signal No.
1B20	X00	1A20	X10	2B20	X20	2A20	X30
1B19	X01	1A19	X11	2B19	X21	2A19	X31
1B18	X02	1A18	X12	2B18	X22	2A18	X32
1B17	X03	1A17	X13	2B17	X23	2A17	X33
1B16	X04	1A16	X14	2B16	X24	2A16	X34
1B15	X05	1A15	X15	2B15	X25	2A15	X35
1B14	X06	1A14	X16	2B14	X26	2A14	X36
1B13	X07	1A13	X17	2B13	X27	2A13	X37
1B12	X08	1A12	X18	2B12	X28	2A12	X38
1B11	X09	1A11	X19	2B11	X29	2A11	X39
1B10	X0A	1A10	X1A	2B10	X2A	2A10	X3A
1B09	X0B	1A09	X1B	2B09	X2B	2A09	X3B
1B08	X0C	1A08	X1C	2B08	X2C	2A08	X3C
1B07	X0D	1A07	X1D	2B07	X2D	2A07	X3D
1B06	X0E	1A06	X1E	2B06	X2E	2A06	X3E
1B05	X0F	1A05	X1F	2B05	X2F	2A05	X3F
1B04	Vacant	1A04	Vacant	2B04	Vacant	2A04	Vacant
1B03	Vacant	1A03	Vacant	2B03	Vacant	2A03	Vacant
1B02	COM1	1A02	Vacant	2B02	COM2	2A02	Vacant
1B01	COM1	1A01	Vacant	2B01	COM2	2A01	Vacant

The above diagram shows the first half of 32 points (F).
The latter half of 32 points (L) are similar.

＊3: Selection of left-hand (F) side provides the first half (X00 to X1F) LED indications, and selection of right-hand (L) side provides the latter half (X20 to X3F) LED indications.

＊4: Pin number of 1 □□□ indicates that of the left-hand side connector, and pin number of 2 □□□ indicates that of the right-hand side connector.

2.13 QX50 DC (Positive Common/Negative Common Shared Type)/ AC Input Module

Specifications \ Type		DC (positive/negative shared common type)/ AC input module	
		QX50	
		DC Input	AC Input
Number of input points		16 points	
Isolation method		Photocoupler	
Rated input voltage		48VDC (+20/-15%, ripple ratio within 5%)	48VAC (+10/-15%) 50/60Hz (±3Hz) (ripple ratio within 5%)
Rated input current		Approx. 4mA	
Input derating		Refer to the derating chart.	
ON voltage/ON current		28V or higher/2.5mA or higher	
OFF voltage/OFF current		10V or lower/1.0mA or lower	
Input impedance		Approx. 11.2kΩ	
Response time＊1	OFF to ON	5ms or less	15ms or less
	ON to OFF	20ms or less	20ms or less
Dielectric withstand voltage		1060VAC rms/3 cycles (altitude 2000m)	
Insulation resistance		10MΩ or more by insulation resistance tester	
Noise immunity		By noise simulator of 500Vp-p noise voltage, 1μs noise width and 25 to 60Hz noise frequency	
		First transient noise IEC61000-4-4: 1kV	
Protection degree		IP2X	
Common terminal arrangement		16 points/common (common terminal: TB17)	
Number of occupied I/O points		16 points (I/O assignment is set as a 16-point input module.)	
Operation indicator		ON indication (LED)	
External connections		18-point terminal block (M3×6 screws)	
Applicable wire size		0.3 to 0.75mm² core (2.8mm OD max.)	
Applicable crimping terminal		R1.25-3 (Sleeved crimping terminals cannot be used.)	
Internal current consumption (5VDC)		50mA (TYP. all points ON)	
Weight		0.13kg	

Appearance

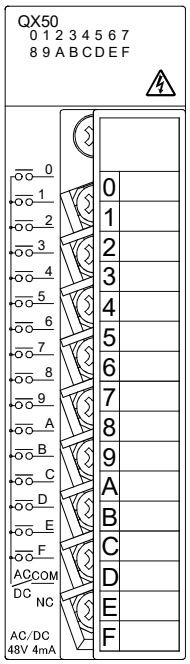

Derating chart

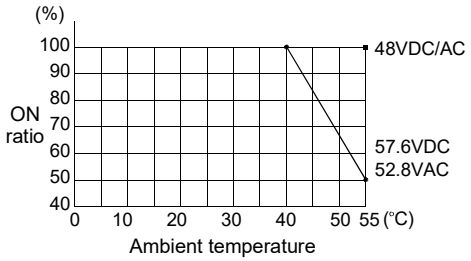

External connection

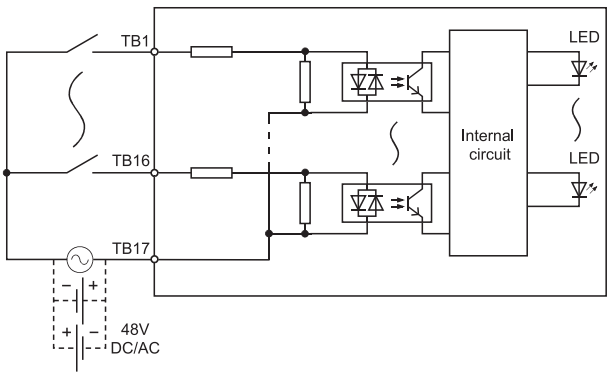

QX50 (16 points)

Terminal block No.	Signal name
TB1	X00
TB2	X01
TB3	X02
TB4	X03
TB5	X04
TB6	X05
TB7	X06
TB8	X07
TB9	X08
TB10	X09
TB11	X0A
TB12	X0B
TB13	X0C
TB14	X0D
TB15	X0E
TB16	X0F
TB17	COM
TB18	Vacant

＊1: Response time cannot be changed. Parameter setting of the CPU module will be invalid.

2.14 QX70 DC Input Module (Positive Common/Negative Common Shared Type)

Specifications \ Type		DC input module (Positive/negative shared common type)		Appearance
		QX70		
Number of input points		16 points		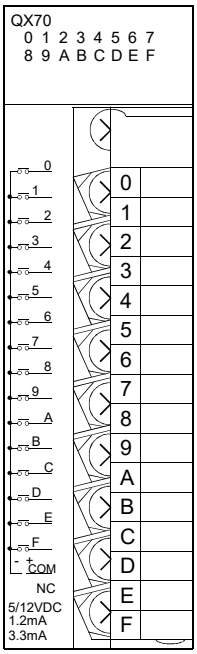
Isolation method		Photocoupler		
Rated input voltage		5VDC (+20/-10%, ripple ratio within 5%)	12VDC (+20/-15%, ripple ratio within 5%)	
Rated input current		Approx. 1.2mA	Approx. 3.3mA	
Input derating		None		
ON voltage/ON current		3.5V or higher/1mA or higher		
OFF voltage/OFF current		1V or lower/0.1mA or lower		
Input resistance		Approx. 3.3kΩ		
Response time	OFF to ON	1ms/5ms/10ms/20ms/70ms or less (configured in PLC parameter) ＊1 (Default: 10ms)		
	ON to OFF	1ms/5ms/10ms/20ms/70ms or less (configured in PLC parameter) ＊1 (Default: 10ms)		
Dielectric withstand voltage		560VAC rms/3 cycles (altitude 2000m)		
Insulation resistance		10MΩ or more by insulation resistance tester		
Noise immunity		By noise simulator of 500Vp-p noise voltage, 1μs noise width and 25 to 60Hz noise frequency		
		First transient noise IEC61000-4-4: 1kV		
Protection degree		IP2X		
Common terminal arrangement		16 points/common (common terminal: TB17)		
Number of occupied I/O points		16 points (I/O assignment is set as a 16-point input module.)		
Operation indicator		ON indication (LED)		
External connections		18-point terminal block (M3×6 screw)		
Applicable wire size		Core cable: 0.3 to 0.75mm^2 (Outside diameter: 2.8mm or smaller)		
Applicable crimping terminal		R1.25-3 (Sleeved crimping terminals cannot be used.)		
Internal current consumption (5VDC)		55mA (TYP, all points ON) (0.06A is shown on the rating plate of the module.)		
Weight		0.14kg		

External connection	QX70 (16 points)

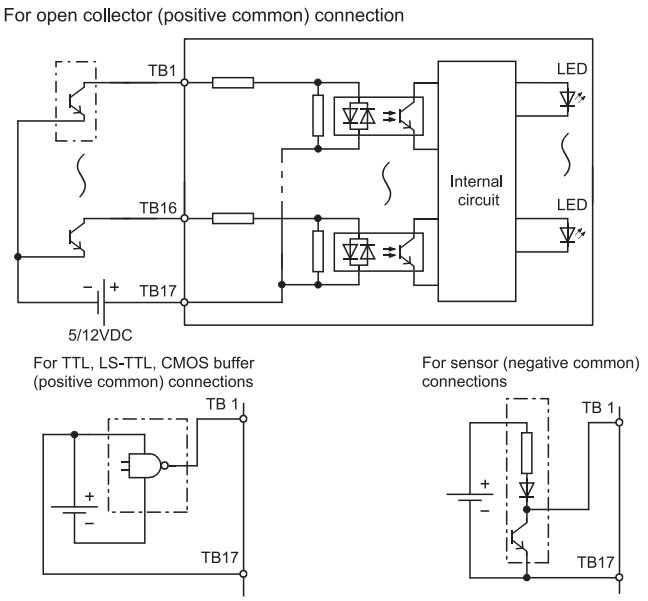

Terminal block No.	Signal name
TB1	X00
TB2	X01
TB3	X02
TB4	X03
TB5	X04
TB6	X05
TB7	X06
TB8	X07
TB9	X08
TB10	X09
TB11	X0A
TB12	X0B
TB13	X0C
TB14	X0D
TB15	X0E
TB16	X0F
TB17	COM
TB18	Vacant

＊1: For the setting method, refer to Section 1.3.1.

2.15 QX70H DC High-speed Input Module (Positive Common Type)

Specifications \ Type			DC high-speed input module (Positive common type)					
			QX70H					Appearance
Number of input points			16 points					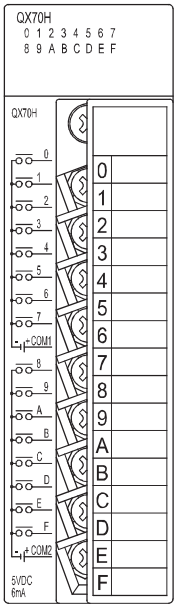
Isolation method			Photocoupler					
Rated input voltage			5VDC (+20/-15%, ripple ratio within 5%)					
Rated input current			Approx. 6mA					
Input derating			None					
ON voltage/ON current			3.5V or higher/3mA or higher					
OFF voltage/OFF current			1V or lower/1mA or lower					
Input impedance			Approx. 470Ω					
Response time	SW1 (noise filter) ＊1		OFF	ON				
	Set value ＊2		Invalid	0.1	0.2	0.4	0.6	1
	OFF to ON	TYP.	0ms ＊3	0.04ms	0.10ms	0.25ms	0.50ms	0.95ms
		MAX.	- ＊3	0.05ms	0.15ms	0.30ms	0.60ms	1.00ms
	ON to OFF	TYP.	0ms ＊3	0.04ms	0.10ms	0.25ms	0.50ms	0.95ms
		MAX.	- ＊3	0.05ms	0.15ms	0.30ms	0.60ms	1.00ms
Function setting	SW2＊4		OFF: Interrupt, ON: High-speed input					
Dielectric withstand voltage			560VAC rms/3 cycles (altitude 2000m)					
Insulation resistance			10MΩ or more by insulation resistance tester					
Noise immunity＊5			By noise simulator of 500Vp-p noise voltage, 1μs noise width and 25 to 60Hz noise frequency					
Protection degree			IP2X					
Common terminal arrangement			8 points/common (common terminal: TB9, TB18)					
Number of occupied I/O points			16 points (I/O assignment is set as a 16-point high-speed input module or 16-point interrupt module.) ＊4					
Interrupt processing condition			Set by Switch setting in GX Developer＊4 ＊6					
Operation indicator			ON indication (LED)					
External connections			18-point terminal block (M3×6 screws)					
Applicable wire size			0.3 to 0.75mm^2 core (2.8mm OD max.)					
Applicable crimping terminal			R1.25-3 (Sleeved crimping terminals cannot be used.)					
Internal current consumption (5VDC)			80mA (TYP. all points ON)					
Weight			0.14kg					

＊1: If the noise filter selector switch (switch 1) on the bottom of the module (refer to Chapter 10) is turned on, the noise filter takes effect.
The off-status noise filter disables I/O response time setting.
After switching on or off the switch 1, reset the power supply of the CPU module.

＊2: Set an input response time in "I/O response time" combo box of PLC parameter in GX Developer. (Default: 0.2ms)
A response time setting value can be changed in GX Developer (SW6D5C-GPPW or later).
For the setting details, refer to Section 1.3.1.

＊3: The actual response time is 5μs delay when turning on, 10μs delay when turning off, because the hardware response time is added.
For the details of the CPU overhead time, refer to manuals for the CPU module used (Function Explanation, Program Fundamentals).

＊4: The module function can be changed according to the status of the function selector switch (switch 2) on the bottom of the module (refer to Chapter 10).
ON: High-speed input
OFF: Interrupt
If the function selector switch (switch 2) setting is changed while the CPU module is in RUN, an error (error code: 2100) occurs.

＊5: Indicates the noise immunity when the noise filter takes effect (the noise filter selector switch (switch 1) is turned on).

＊6: For the setting method, refer to Section 1.3.3.

External connection	QX70H (16 points)

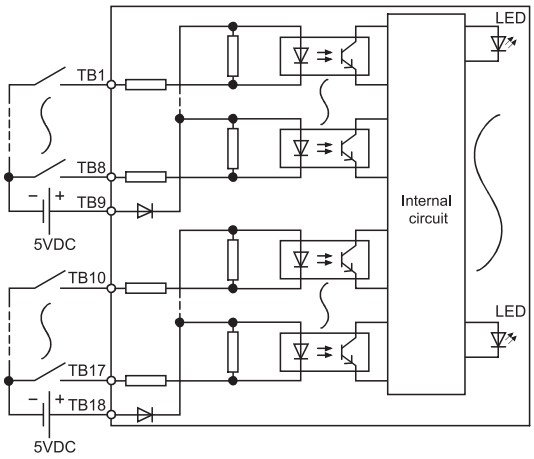

Terminal block No.	Signal name
TB1	X00
TB2	X01
TB3	X02
TB4	X03
TB5	X04
TB6	X05
TB7	X06
TB8	X07
TB9	COM1
TB10	X08
TB11	X09
TB12	X0A
TB13	X0B
TB14	X0C
TB15	X0D
TB16	X0E
TB17	X0F
TB18	COM2

2.16 QX71 DC Input Module (Positive/Negative Shared Common Type)

Specifications \ Type		DC input module (Positive/negative shared common type)	
		QX71	Appearance
Number of input points		32 points	
Isolation method		Photocoupler	
Rated input voltage		5VDC (+20/-10%, ripple ratio within 5%)	12VDC (+20/-15%, ripple ratio within 5%)
Rated input current		Approx. 1.2mA	Approx. 3.3mA
Input derating		None	
ON voltage/ON current		3.5V or higher/1mA or higher	
OFF voltage/OFF current		1V or lower/0.1mA or lower	
Input resistance		Approx. 3.3kΩ	
Response time	OFF to ON	1ms/5ms/10ms/20ms/70ms or less (configured in PLC parameter) ＊1 (Default: 10ms)	
	ON to OFF	1ms/5ms/10ms/20ms/70ms or less (configured in PLC parameter) ＊1 (Default: 10ms)	
Dielectric withstand voltage		560VAC rms/3 cycles (altitude 2000m)	
Insulation resistance		10MΩ or more by insulation resistance tester	
Noise immunity		By noise simulator of 500Vp-p noise voltage, 1 μs noise width and 25 to 60Hz noise frequency	
		First transient noise IEC61000-4-4: 1kV	
Protection degree		IP2X	
Common terminal arrangement		32 points/common (common terminal: B01, B02)	
Number of occupied I/O points		32 points (I/O assignment is set as a 32-point input module.)	
Operation indicator		ON indication (LED)	
External connections		40-pin connector	
Applicable wire size		0.088 to 0.3mm2 (For A6CON1 or A6CON4) ＊2	
Applicable connector		A6CON1, A6CON2, A6CON3, A6CON4 (optional)	
Internal current consumption (5VDC)		70mA (TYP, all points ON)	
Weight		0.12kg	

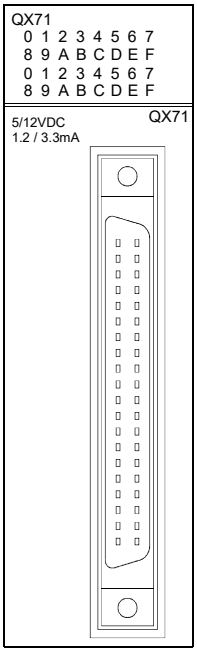

External connection

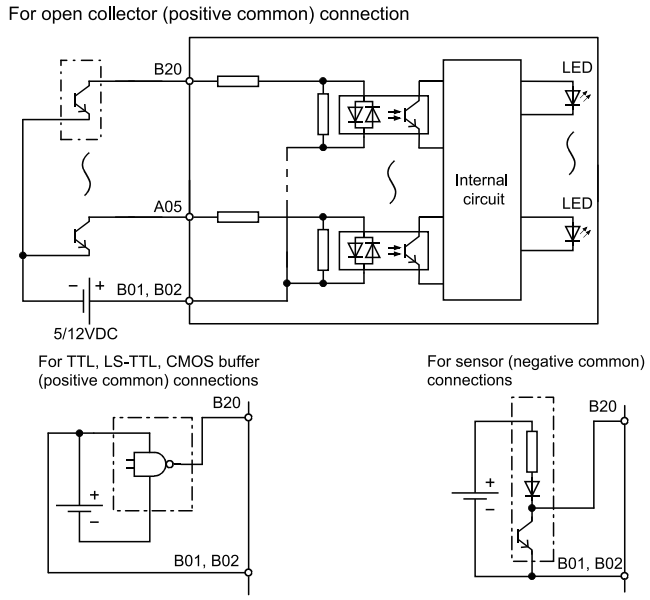

Pin-Outs

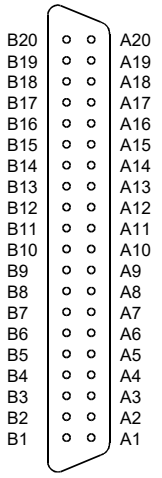

Module front view

Pin No.	Signal No.	Pin No.	Signal No.
B20	X00	A20	X10
B19	X01	A19	X11
B18	X02	A18	X12
B17	X03	A17	X13
B16	X04	A16	X14
B15	X05	A15	X15
B14	X06	A14	X16
B13	X07	A13	X17
B12	X08	A12	X18
B11	X09	A11	X19
B10	X0A	A10	X1A
B09	X0B	A09	X1B
B08	X0C	A08	X1C
B07	X0D	A07	X1D
B06	X0E	A06	X1E
B05	X0F	A05	X1F
B04	Vacant	A04	Vacant
B03	Vacant	A03	Vacant
B02	COM	A02	Vacant
B01	COM	A01	Vacant

＊1: For the setting method, refer to Section 1.3.1.
＊2: When using A6CON2 or A6CON3, refer to Chapter 7.

2.17 QX72 DC Input Module (Positive/Negative Shared Common Type)

Specifications \ Type		DC input module (Positive/negative shared common type)		
		QX72		Appearance
Number of input points		64 points		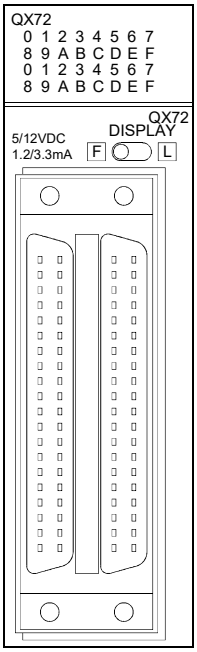
Isolation method		Photocoupler		
Rated input voltage		5VDC (+20/-10%, ripple ratio within 5%)	12VDC (+20/-15%, ripple ratio within 5%)	
Rated input current		Approx. 1.2mA	Approx. 3.3mA	
Input derating		None		
ON voltage/ON current		3.5V or higher/3mA or higher		
OFF voltage/OFF current		1V or lower/0.1mA or lower		
Input resistance		Approx. 3.3kΩ		
Response time	OFF to ON	1ms/5ms/10ms/20ms/70ms or less (configured in PLC parameter) ＊1 (Default: 10ms)		
	ON to OFF	1ms/5ms/10ms/20ms/70ms or less (configured in PLC parameter) ＊1 (Default: 10ms)		
Dielectric withstand voltage		560VAC rms/3 cycles (altitude 2000m)		
Insulation resistance		10MΩ or more by insulation resistance tester		
Noise immunity		By noise simulator of 500Vp-p noise voltage, 1μs noise width and 25 to 60Hz noise frequency		
		First transient noise IEC61000-4-4: 1kV		
Protection degree		IP2X		
Common terminal arrangement		32 points/common (common terminal: 1B01, 1B02, 2B01, 2B02)		
Number of occupied I/O points		64 points (I/O assignment is set as a 64-point input module.)		
Operation indicator		ON indication (LED), 32-point switchover using switch		
External connections		40-pin connector		
Applicable wire size		0.088 to 0.3mm^2 (For A6CON1 or A6CON4) ＊2		
Applicable connector		A6CON1, A6CON2, A6CON3, A6CON4 (optional)		
Internal current consumption (5VDC)		85mA (TYP, all points ON) (0.09A is shown on the rating plate of the module.)		
Weight		0.13kg		

＊1: For the setting method, refer to Section 1.3.1.

＊2: When using A6CON2 and A6CON3, refer to Chapter 7.

External connection

For open collector (positive common) connection

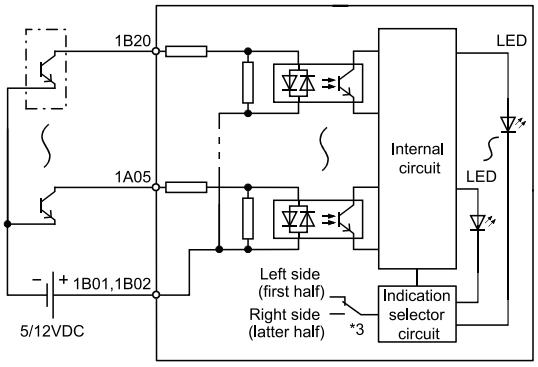

For TTL, LS-TTL, CMOS buffer (positive common) connections

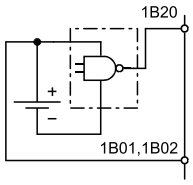

For sensor (negative common) connections

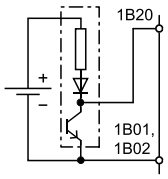

The above diagram shows the first half of 32 points (F).
The latter half of 32 points (L) are similar.

Pin-Outs

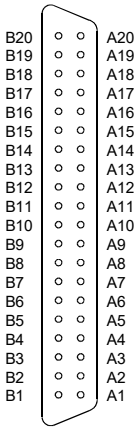

Module front view

Pin No. ＊4	Signal No.	Pin No. ＊4	Signal No.	Pin No. ＊4	Signal No.	Pin No. ＊4	Signal No.
1B20	X00	1A20	X10	2B20	X20	2A20	X30
1B19	X01	1A19	X11	2B19	X21	2A19	X31
1B18	X02	1A18	X12	2B18	X22	2A18	X32
1B17	X03	1A17	X13	2B17	X23	2A17	X33
1B16	X04	1A16	X14	2B16	X24	2A16	X34
1B15	X05	1A15	X15	2B15	X25	2A15	X35
1B14	X06	1A14	X16	2B14	X26	2A14	X36
1B13	X07	1A13	X17	2B13	X27	2A13	X37
1B12	X08	1A12	X18	2B12	X28	2A12	X38
1B11	X09	1A11	X19	2B11	X29	2A11	X39
1B10	X0A	1A10	X1A	2B10	X2A	2A10	X3A
1B09	X0B	1A09	X1B	2B09	X2B	2A09	X3B
1B08	X0C	1A08	X1C	2B08	X2C	2A08	X3C
1B07	X0D	1A07	X1D	2B07	X2D	2A07	X3D
1B06	X0E	1A06	X1E	2B06	X2E	2A06	X3E
1B05	X0F	1A05	X1F	2B05	X2F	2A05	X3F
1B04	Vacant	1A04	Vacant	2B04	Vacant	2A04	Vacant
1B03	Vacant	1A03	Vacant	2B03	Vacant	2A03	Vacant
1B02	COM1	1A02	Vacant	2B02	COM2	2A02	Vacant
1B01	COM1	1A01	Vacant	2B01	COM2	2A01	Vacant

＊3: Selection of left-hand (F) side provides the first half (X00 to X1F) LED indications, and selection of right-hand (L) side provides the latter half (X20 to X3F) LED indications.

＊4: Pin number of 1□□□ indicates that of the left-hand side connector, and pin number of 2□□□ indicates that of the right-hand side connector.

2.18 QX80 DC Input Module (Negative Common Type)

Specifications \ Type		DC input module (Negative common type)	
		QX80	Appearance
Number of input points		16 points	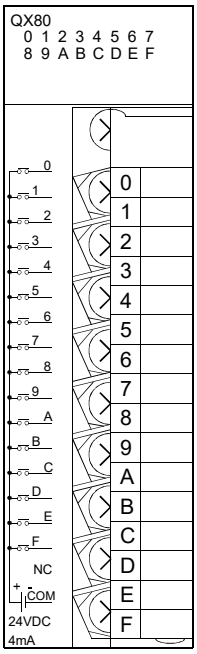
Isolation method		Photocoupler	
Rated input voltage		24VDC (+20/-15%, ripple ratio within 5%)	
Rated input current		Approx. 4mA	
Input derating		No	
ON voltage/ON current		19V or higher/3mA or higher	
OFF voltage/OFF current		11V or lower/1.7mA or lower	
Input impedance		Approx. 5.6kΩ	
Response time	OFF to ON	1ms/5ms/10ms/20ms/70ms or less (configured in PLC parameter) ＊1 (Default: 10ms)	
	ON to OFF	1ms/5ms/10ms/20ms/70ms or less (configured in PLC parameter) ＊1 (Default: 10ms)	
Dielectric withstand voltage		560VAC rms/3 cycles (altitude 2000m)	
Insulation resistance		10MΩ or more by insulation resistance tester	
Noise immunity		By noise simulator of 500Vp-p noise voltage, 1 μs noise width and 25 to 60Hz noise frequency	
		First transient noise IEC61000-4-4: 1kV	
Protection degree		IP2X	
Common terminal arrangement		16 points/common (common terminal: TB18)	
Number of occupied I/O points		16 points (I/O assignment is set as a 16-point input module.)	
Operation indicator		ON indication (LED)	
External connections		18-point terminal block (M3×6 screws)	
Applicable wire size		0.3 to 0.75mm^2 core (2.8mm OD max.)	
Applicable crimping terminal		R1.25-3 (Sleeved crimping terminals cannot be used.)	
Internal current consumption (5VDC)		50mA (TYP. all points ON)	
Weight		0.16kg	

External connection	QX80 (16 points)
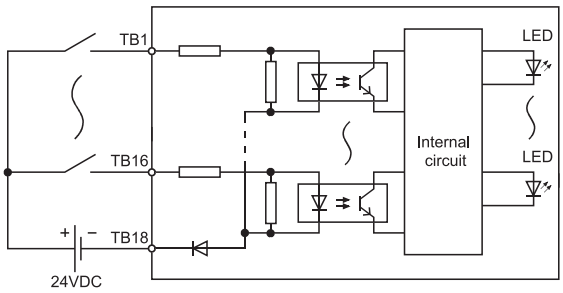	

Terminal block No.	Signal name
TB1	X00
TB2	X01
TB3	X02
TB4	X03
TB5	X04
TB6	X05
TB7	X06
TB8	X07
TB9	X08
TB10	X09
TB11	X0A
TB12	X0B
TB13	X0C
TB14	X0D
TB15	X0E
TB16	X0F
TB17	Vacant
TB18	COM

＊1: For the setting method, refer to Section 1.3.1.

2.19 QX80-TS DC Input Module (Negative Common Type)

This module is a spring clamp terminal block type and an input module that has indicators for checking the insertion state of wire.

Specifications \ Type		DC input module (Negative common type)	
		QX80-TS	Appearance
Number of input points		16 points	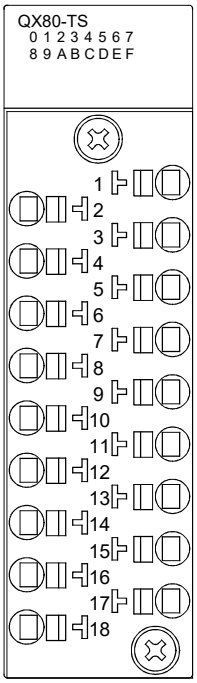
Isolation method		Photocoupler	
Rated input voltage		24VDC (+20/-15%, ripple ratio within 5%)	
Rated input current		Approx. 4mA	
Input derating		No	
ON voltage/ON current		19V or higher/3mA or higher	
OFF voltage/OFF current		11V or lower/1.7mA or lower	
Input impedance		Approx. 5.6kΩ	
Response time	OFF to ON	1ms/5ms/10ms/20ms/70ms or less (configured in PLC parameter) ＊1 (Default: 10ms)	
	ON to OFF	1ms/5ms/10ms/20ms/70ms or less (configured in PLC parameter) ＊1 (Default: 10ms)	
Dielectric withstand voltage		560VAC rms/3 cycles (altitude 2000m)	
Insulation resistance		10MΩ or more by insulation resistance tester	
Noise immunity		By noise simulator of 500Vp-p noise voltage, 1 μs noise width and 25 to 60Hz noise frequency	
		First transient noise IEC61000-4-4: 1kV	
Protection degree		IP2X	
Common terminal arrangement		16 points/common (common terminal: TB18)	
Number of occupied I/O points		16 points (I/O assignment is set as a 16-point input module.)	
Operation indicator		ON indication (LED)	
External connections		Two-piece spring clamp terminal block	
Applicable wire size		0.3 to 2.0mm^2 core (22 to 15 AWG)	
Applicable crimping terminal		Refer to section 9.1	
Internal current consumption (5VDC)		50mA (TYP. all points ON)	
Weight		0.16kg	

External connection

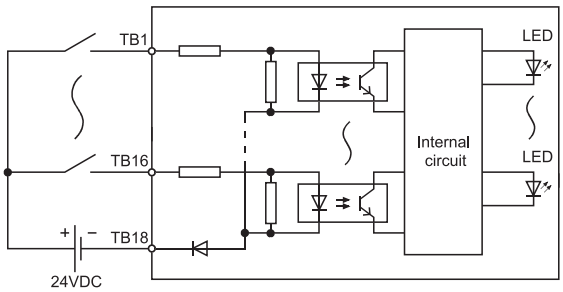

QX80-TS (16 points)

Terminal block No.	Signal name
TB1	X00
TB2	X01
TB3	X02
TB4	X03
TB5	X04
TB6	X05
TB7	X06
TB8	X07
TB9	X08
TB10	X09
TB11	X0A
TB12	X0B
TB13	X0C
TB14	X0D
TB15	X0E
TB16	X0F
TB17	Vacant
TB18	COM

＊1: For the setting method, refer to Section 1.3.1.

2.20 QX80H DC High-speed Input Module (Negative Common Type)

Specifications \ Type			DC high-speed input module (Negative common type)					
			QX80H					Appearance
Number of input points			16 points					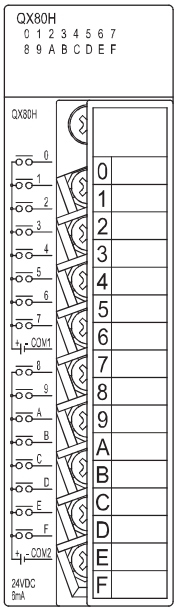
Isolation method			Photocoupler					
Rated input voltage			24VDC (+20/-15%, ripple ratio within 5%)					
Rated input current			Approx. 6mA					
Input derating			Refer to the derating chart.					
ON voltage/ON current			15V or higher/3mA or higher					
OFF voltage/OFF current			5V or lower/1.6mA or lower					
Input impedance			Approx. 3.9kΩ					
Response time	SW1 (noise filter) ＊1		OFF	ON				
	Set value ＊2		Invalid	0.1	0.2	0.4	0.6	1
	OFF to ON	TYP.	0ms ＊3	0.04ms	0.10ms	0.25ms	0.50ms	0.95ms
		MAX.	- ＊3	0.05ms	0.15ms	0.30ms	0.60ms	1.00ms
	ON to OFF	TYP.	0ms ＊3	0.04ms	0.10ms	0.25ms	0.50ms	0.95ms
		MAX.	- ＊3	0.05ms	0.15ms	0.30ms	0.60ms	1.00ms
Function setting	SW2＊4		OFF: Interrupt, ON: High-speed input					
Dielectric withstand voltage			560VAC rms/3 cycles (altitude 2000m)					
Insulation resistance			10MΩ or more by insulation resistance tester					
Noise immunity＊5			By noise simulator of 500Vp-p noise voltage, 1μs noise width and 25 to 60Hz noise frequency					
Protection degree			IP2X					
Common terminal arrangement			8 points/common (common terminal: TB9, TB18)					
Number of occupied I/O points			16 points (I/O assignment is set as a 16-point high-speed input module or 16-point interrupt module.)＊4					
Interrupt processing condition			Set by Switch setting in GX Developer＊4 ＊6					
Operation indicator			ON indication (LED)					
External connections			18-point terminal block (M3×6 screws)					
Applicable wire size			0.3 to 0.75mm^2 core (2.8mm OD max.)					
Applicable crimping terminal			R1.25-3 (Sleeved crimping terminals cannot be used.)					
Internal current consumption (5VDC)			80mA (TYP. all points ON)					
Weight			0.16kg					

＊1: If the noise filter selector switch (switch 1) on the bottom of the module (refer to Chapter 10) is turned on, the noise filter takes effect.
The off-status noise filter disables I/O response time setting.
After switching on or off the switch 1, reset the power supply of the CPU module.

＊2: Set an input response time in "I/O response time" combo box of PLC parameter in GX Developer. (Default: 0.2ms)
A response time setting value can be changed in GX Developer (SW6D5C-GPPW or later).
For the setting details, refer to Section 1.3.1.

＊3: The actual response time is 5μs delay when turning on, 10μs delay when turning off, because the hardware response time is added.
For the details of the CPU overhead time, refer to manuals for the CPU module used (Function Explanation, Program Fundamentals).

＊4: The module function can be changed according to the status of the function selector switch (switch 2) on the bottom of the module (refer to Chapter 10).
ON: High-speed input
OFF: Interrupt
If the function selector switch (switch 2) setting is changed while the CPU module is in RUN, an error (error code: 2100) occurs.

＊5: Indicates the noise immunity when the noise filter takes effect (the noise filter selector switch (switch 1) is turned on).

＊6: For the setting method, refer to Section 1.3.3.

Derating chart

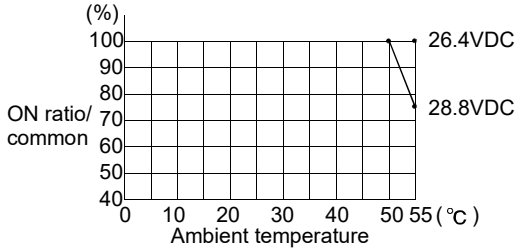

External connection

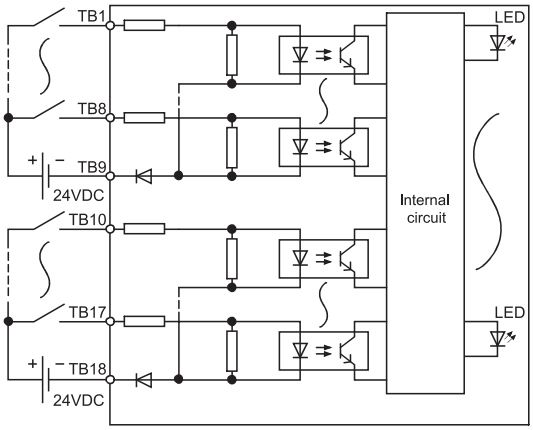

QX80H (16 points)

Terminal block No.	Signal name
TB1	X00
TB2	X01
TB3	X02
TB4	X03
TB5	X04
TB6	X05
TB7	X06
TB8	X07
TB9	COM1
TB10	X08
TB11	X09
TB12	X0A
TB13	X0B
TB14	X0C
TB15	X0D
TB16	X0E
TB17	X0F
TB18	COM2

2.21 QX81 DC Input Module (Negative Common Type)

Specifications \ Type		DC input module (Negative common type) QX81	Appearance
Number of input points		32 points	
Isolation method		Photocoupler	
Rated input voltage		24VDC (+20/-15%, ripple ratio within 5%)	
Rated input current		Approx. 4mA	
Input derating		Refer to the derating chart.	
ON voltage/ON current		19V or higher/3mA or higher	
OFF voltage/OFF current		11V or lower/1.7mA or lower	
Input impedance		Approx. 5.6kΩ	
Response time	OFF to ON	1ms/5ms/10ms/20ms/70ms or less (configured in PLC parameter) ＊1 (Default: 10ms)	
	ON to OFF	1ms/5ms/10ms/20ms/70ms or less (configured in PLC parameter) ＊1 (Default: 10ms)	
Dielectric withstand voltage		560VAC rms/3 cycles (altitude 2000m)	
Insulation resistance		10MΩ or more by insulation resistance tester	
Noise immunity		By noise simulator of 500Vp-p noise voltage, 1 μs noise width and 25 to 60Hz noise frequency	
		First transient noise IEC61000-4-4: 1kV	
Protection degree		IP2X	
Common terminal arrangement		32 points/common (common terminal: 17, 18, 36)	
Number of occupied I/O points		32 points (I/O assignment is set as a 32-point input module.)	
Operation indicator		ON indication (LED)	
External connections		37-pin D-sub connector	
Applicable wire size		0.088 to 0.3mm2 (For A6CON1E) ＊2	
Applicable connector		A6CON1E, A6CON2E, A6CON3E (optional)	
Applicable connector/terminal block converter module		A6TBX36-E, A6TBX54-E, A6TBX70-E	
Internal current consumption (5VDC)		75mA (TYP. all points ON) (0.08A is shown on the rating plate of the module.)	
Weight		0.16kg	

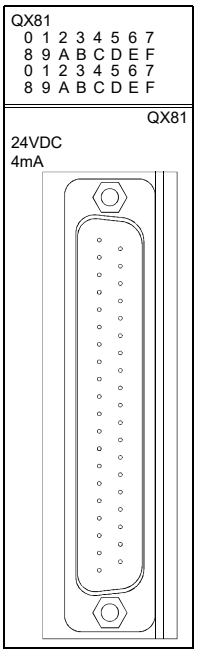

Derating chart

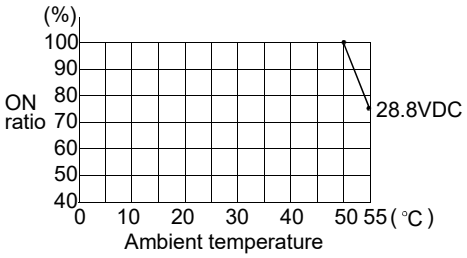

External connection

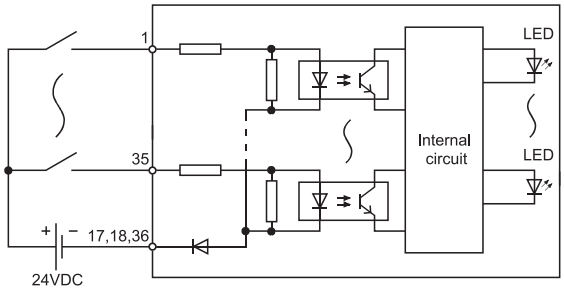

Pin-Outs

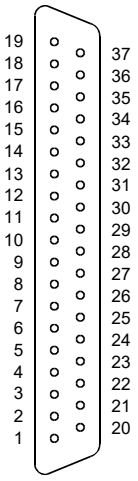

Module front view

Pin No.	Signal No.	Pin No.	Signal No.
1	X00	9	X10
20	X01	28	X11
2	X02	10	X12
21	X03	29	X13
3	X04	11	X14
22	X05	30	X15
4	X06	12	X16
23	X07	31	X17
5	X08	13	X18
24	X09	32	X19
6	X0A	14	X1A
25	X0B	33	X1B
7	X0C	15	X1C
26	X0D	34	X1D
8	X0E	16	X1E
27	X0F	35	X1F
17	COM	37	Vacant
36	COM	19	Vacant
18	COM		

＊1: For the setting method, refer to Section 1.3.1.

＊2: When using A6CON2E or A6CON3E, refer to Chapter 7.

2.22 QX81-S2 DC Input Module (Negative Common Type)

Specifications \ Type		DC input module (Negative common type)	
		QX81-S2	Appearance
Number of input points		32 points	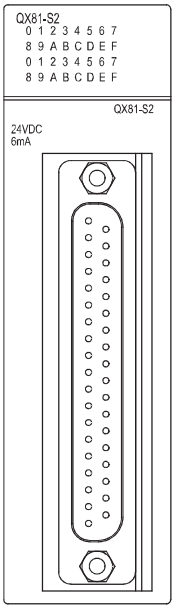
Isolation method		Photocoupler	
Rated input voltage		24VDC (+20/-15%, ripple ratio within 5%)	
Rated input current		Approx. 6mA	
Input derating		Refer to the derating chart.	
ON voltage/ON current		15V or higher/3mA or higher	
OFF voltage/OFF current		5V or lower/1.7mA or lower	
Input impedance		Approx. 3.6kΩ	
Response time	OFF to ON	1ms/5ms/10ms/20ms/70ms or less (configured in PLC parameter) ＊1 (Default: 10ms)	
	ON to OFF	1ms/5ms/10ms/20ms/70ms or less (configured in PLC parameter) ＊1 (Default: 10ms)	
Dielectric withstand voltage		560VAC rms/3 cycles (altitude 2000m)	
Insulation resistance		10MΩ or more by insulation resistance tester	
Noise immunity		By noise simulator of 500Vp-p noise voltage, 1μs noise width and 25 to 60Hz noise frequency	
		First transient noise IEC61000-4-4: 1kV	
Protection degree		IP2X	
Common terminal arrangement		32 points/common (common terminal: 17, 18, 36)	
Number of occupied I/O points		32 points (I/O assignment is set as a 32-point input module.)	
Operation indicator		ON indication (LED)	
External connections		37-pin D-sub connector	
Applicable wire size		0.088 to 0.3mm2 (For A6CON1E) ＊2	
Applicable connector		A6CON1E, A6CON2E, A6CON3E (optional)	
Applicable connector/terminal block converter module		A6TBX36-E, A6TBX54-E, A6TBX70-E	
Internal current consumption (5VDC)		75mA (TYP. all points ON) (0.08A is shown on the rating plate of the module.)	
Weight		0.16kg	

Derating chart

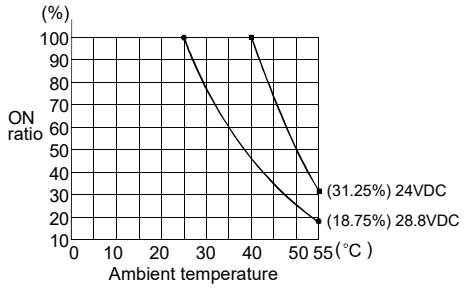

External connection

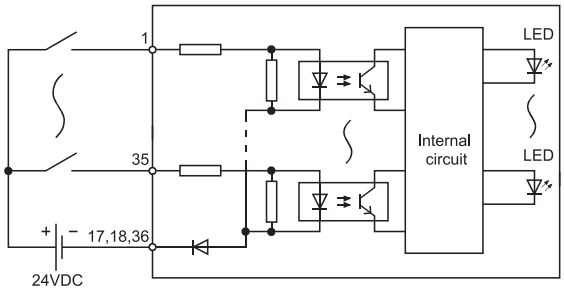

Pin-Outs

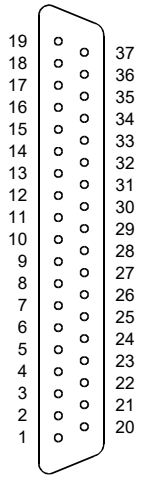

Module front view

Pin No.	Signal No.	Pin No.	Signal No.
1	X00	9	X10
20	X01	28	X11
2	X02	10	X12
21	X03	29	X13
3	X04	11	X14
22	X05	30	X15
4	X06	12	X16
23	X07	31	X17
5	X08	13	X18
24	X09	32	X19
6	X0A	14	X1A
25	X0B	33	X1B
7	X0C	15	X1C
26	X0D	34	X1D
8	X0E	16	X1E
27	X0F	35	X1F
17	COM	37	Vacant
36	COM	19	Vacant
18	COM		

＊1: For the setting method, refer to Section 1.3.1.

＊2: When using A6CON2E or A6CON3E, refer to Chapter 7.

2.23 QX82 DC Input Module (Negative Common Type)

Specifications \ Type		DC input module (Negative common type)	
		QX82	Appearance
Number of input points		64 points	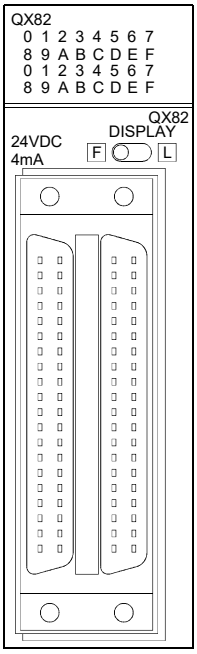
Isolation method		Photocoupler	
Rated input voltage		24VDC (+20/-15%, ripple ratio within 5%)	
Rated input current		Approx. 4mA	
Input derating		Refer to the derating chart.	
ON voltage/ON current		19V or higher/3mA or higher	
OFF voltage/OFF current		11V or lower/1.7mA or lower	
Input impedance		Approx. 5.6kΩ	
Response time	OFF to ON	1ms/5ms/10ms/20ms/70ms or less (configured in PLC parameter) ＊1 (Default: 10ms)	
	ON to OFF	1ms/5ms/10ms/20ms/70ms or less (configured in PLC parameter) ＊1 (Default: 10ms)	
Dielectric withstand voltage		560VAC rms/3 cycles (altitude 2000m)	
Insulation resistance		10MΩ or more by insulation resistance tester	
Noise immunity		By noise simulator of 500Vp-p noise voltage, 1μs noise width and 25 to 60Hz noise frequency	
		First transient noise IEC61000-4-4: 1kV	
Protection degree		IP2X	
Common terminal arrangement		32 points/common (common terminal: 1B01, 1B02, 2B01, 2B02)	
Number of occupied I/O points		64 points (I/O assignment is set as a 64-point input module.)	
Operation indicator		ON indication (LED), 32 point switch-over using switch	
External connections		40-pin connector	
Applicable wire size		0.088 to 0.3mm² (For A6CON1 or A6CON4) ＊2	
Applicable connector		A6CON1, A6CON2, A6CON3, A6CON4 (optional)	
Applicable connector/terminal block converter module		————	
Internal current consumption (5VDC)		90mA (TYP. all points ON)	
Weight		0.18kg	

＊1: For the setting method, refer to Section 1.3.1.
＊2: When using A6CON2 or A6CON3, refer to Chapter 7.

Derating chart

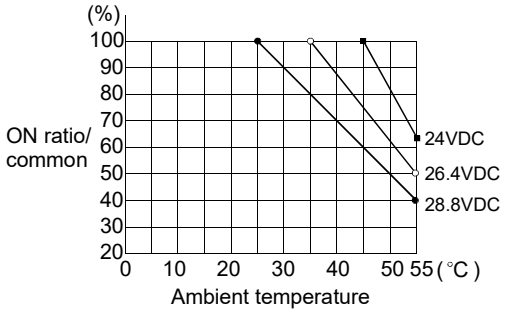

External connection

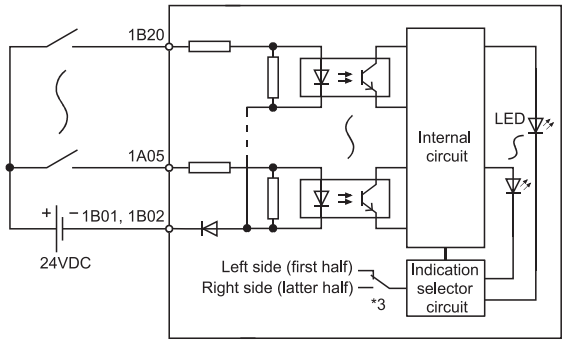

The above diagram shows the first half of 32 points (F).
The latter half of 32 points (L) are similar.

Pin-Outs

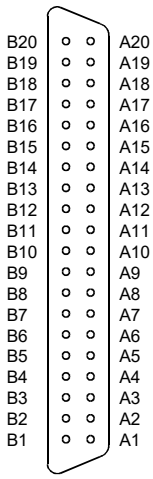

Module front view

Pin No. ＊4	Signal No.	Pin No. ＊4	Signal No.	Pin No. ＊4	Signal No.	Pin No. ＊4	Signal No.
1B20	X00	1A20	X10	2B20	X20	2A20	X30
1B19	X01	1A19	X11	2B19	X21	2A19	X31
1B18	X02	1A18	X12	2B18	X22	2A18	X32
1B17	X03	1A17	X13	2B17	X23	2A17	X33
1B16	X04	1A16	X14	2B16	X24	2A16	X34
1B15	X05	1A15	X15	2B15	X25	2A15	X35
1B14	X06	1A14	X16	2B14	X26	2A14	X36
1B13	X07	1A13	X17	2B13	X27	2A13	X37
1B12	X08	1A12	X18	2B12	X28	2A12	X38
1B11	X09	1A11	X19	2B11	X29	2A11	X39
1B10	X0A	1A10	X1A	2B10	X2A	2A10	X3A
1B09	X0B	1A09	X1B	2B09	X2B	2A09	X3B
1B08	X0C	1A08	X1C	2B08	X2C	2A08	X3C
1B07	X0D	1A07	X1D	2B07	X2D	2A07	X3D
1B06	X0E	1A06	X1E	2B06	X2E	2A06	X3E
1B05	X0F	1A05	X1F	2B05	X2F	2A05	X3F
1B04	Vacant	1A04	Vacant	2B04	Vacant	2A04	Vacant
1B03	Vacant	1A03	Vacant	2B03	Vacant	2A03	Vacant
1B02	COM1	1A02	Vacant	2B02	COM2	2A02	Vacant
1B01	COM1	1A01	Vacant	2B01	COM2	2A01	Vacant

＊3: Selection of left-hand (F) side provides the first half (X00 to X1F) LED indications, and selection of right-hand (L) side provides the latter half (X20 to X3F) LED indications.
＊4: Pin number of 1 □□□ indicates that of the left-hand side connector, and pin number of 2 □□□ indicates that of the right-hand side connector.

2.24 QX82-S1 DC Input Module (Negative Common Type)

Specifications \ Type			DC input module (Negative common type)				
			QX82-S1				Appearance
Number of input points			64 points				
Isolation method			Photocoupler				
Rated input voltage			24VDC (+20/-15%, ripple ratio within 5%)				
Rated input current			Approx. 4mA				
Input derating			Refer to the derating chart.				
ON voltage/ON current			19V or higher/3.0mA or higher				
OFF voltage/OFF current			9.5V or lower/1.5mA or lower				
Input impedance			Approx. 5.6kΩ				
Response time	Set value ＊1		0.1	0.2	0.4	0.6	1
	OFF to ON	TYP.	0.05ms	0.15ms	0.30ms	0.55ms	1.05ms
		MAX.	0.12ms	0.20ms	0.40ms	0.60ms	1.20ms
	ON to OFF	TYP.	0.15ms	0.20ms	0.35ms	0.60ms	1.10ms
		MAX.	0.20ms	0.30ms	0.50ms	0.70ms	1.30ms
Dielectric withstand voltage			560VAC rms/3 cycles (altitude 2000m)				
Insulation resistance			10MΩ or more by insulation resistance tester				
Noise immunity			By noise simulator of 500Vp-p noise voltage, 1 μs noise width and 25 to 60Hz noise frequency				
			First transient noise IEC61000-4-4: 1kV				
Protection degree			IP2X				
Common terminal arrangement			32 points/common (common terminal: 1B01, 1B02, 2B01, 2B02)				
Number of occupied I/O points			64 points (I/O assignment is set as a 64-point high-speed input module.)				
Operation indicator			ON indication (LED), 32 point switch-over using switch				
External connections			40-pin connector				
Applicable wire size			0.088 to 0.3mm2 (For A6CON1 or A6CON4) ＊2				
Applicable connector			A6CON1, A6CON2, A6CON3, A6CON4 (optional)				
Applicable connector/terminal block converter module			————				
Internal current consumption (5VDC)			90mA (TYP. all points ON)				
Weight			0.18kg				

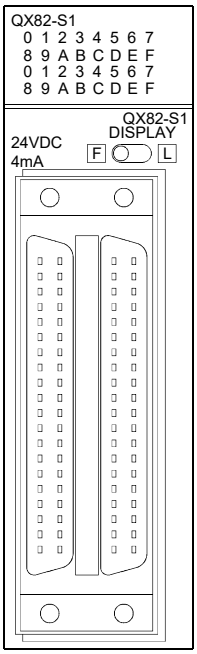

＊1: Configured in PLC parameter. (Default: 0.2ms)
A response time setting value can be changed in GX Developer (SW5D5C-GPPW or later).
For the setting method, refer to Section 1.3.1.
＊2: When using A6CON2 or A6CON3, refer to Chapter 7.

Derating chart

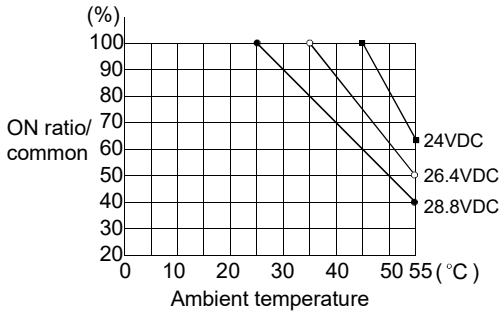

External connection

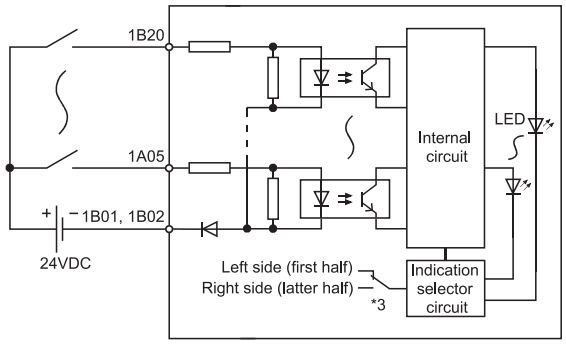

The above diagram shows the first half of 32 points (F).
The latter half of 32 points (L) are similar.

Pin-Outs

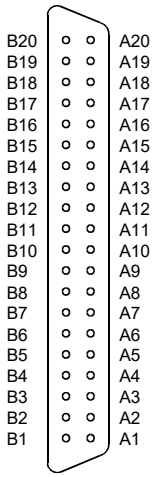

Module front view

Pin No. ＊4	Signal No.	Pin No. ＊4	Signal No.	Pin No. ＊4	Signal No.	Pin No. ＊4	Signal No.
1B20	X00	1A20	X10	2B20	X20	2A20	X30
1B19	X01	1A19	X11	2B19	X21	2A19	X31
1B18	X02	1A18	X12	2B18	X22	2A18	X32
1B17	X03	1A17	X13	2B17	X23	2A17	X33
1B16	X04	1A16	X14	2B16	X24	2A16	X34
1B15	X05	1A15	X15	2B15	X25	2A15	X35
1B14	X06	1A14	X16	2B14	X26	2A14	X36
1B13	X07	1A13	X17	2B13	X27	2A13	X37
1B12	X08	1A12	X18	2B12	X28	2A12	X38
1B11	X09	1A11	X19	2B11	X29	2A11	X39
1B10	X0A	1A10	X1A	2B10	X2A	2A10	X3A
1B09	X0B	1A09	X1B	2B09	X2B	2A09	X3B
1B08	X0C	1A08	X1C	2B08	X2C	2A08	X3C
1B07	X0D	1A07	X1D	2B07	X2D	2A07	X3D
1B06	X0E	1A06	X1E	2B06	X2E	2A06	X3E
1B05	X0F	1A05	X1F	2B05	X2F	2A05	X3F
1B04	Vacant	1A04	Vacant	2B04	Vacant	2A04	Vacant
1B03	Vacant	1A03	Vacant	2B03	Vacant	2A03	Vacant
1B02	COM1	1A02	Vacant	2B02	COM2	2A02	Vacant
1B01	COM1	1A01	Vacant	2B01	COM2	2A01	Vacant

＊3: Selection of left-hand (F) side provides the first half (X00 to X1F) LED indications, and selection of right-hand (L) side provides the latter half (X20 to X3F) LED indications.

＊4: Pin number of 1 □□□ indicates that of the left-hand side connector, and pin number of 2 □□□ indicates that of the right-hand side connector.

2.25 QX90H DC High-speed Input Module (Negative Common Type)

Specifications \ Type			DC high-speed input module (Negative common type)					
			QX90H					Appearance
Number of input points			16 points					
Isolation method			Photocoupler					
Rated input voltage			5VDC (+20/-15%, ripple ratio within 5%)					
Rated input current			Approx. 6mA					
Input derating			None					
ON voltage/ON current			3.5V or higher/3mA or higher					
OFF voltage/OFF current			1V or lower/1mA or lower					
Input impedance			Approx. 470Ω					
Response time	SW1 (noise filter) ＊1		OFF	ON				
	Set value ＊2		Invalid	0.1	0.2	0.4	0.6	1
	OFF to ON	TYP.	0ms ＊3	0.04ms	0.10ms	0.25ms	0.50ms	0.95ms
		MAX.	- ＊3	0.05ms	0.15ms	0.30ms	0.60ms	1.00ms
	ON to OFF	TYP.	0ms ＊3	0.04ms	0.10ms	0.25ms	0.50ms	0.95ms
		MAX.	- ＊3	0.05ms	0.15ms	0.30ms	0.60ms	1.00ms
Function setting	SW2＊4		OFF: Interrupt, ON: High-speed input					
Dielectric withstand voltage			560VAC rms/3 cycles (altitude 2000m)					
Insulation resistance			10MΩ or more by insulation resistance tester					
Noise immunity＊5			By noise simulator of 500Vp-p noise voltage, 1μs noise width and 25 to 60Hz noise frequency					
Protection degree			IP2X					
Common terminal arrangement			8 points/common (common terminal: TB9, TB18)					
Number of occupied I/O points			16 points (I/O assignment is set as a 16-point high-speed input module or 16-point interrupt module.)＊4					
Interrupt processing condition			Set by Switch setting in GX Developer＊4 ＊6					
Operation indicator			ON indication (LED)					
External connections			18-point terminal block (M3×6 screws)					
Applicable wire size			0.3 to 0.75mm^2 core (2.8mm OD max.)					
Applicable crimping terminal			R1.25-3 (Sleeved crimping terminals cannot be used.)					
Internal current consumption (5VDC)			80mA (TYP. all points ON)					
Weight			0.14kg					

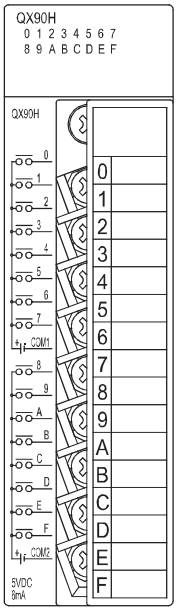

＊1: If the noise filter selector switch (switch 1) on the bottom of the module (refer to Chapter 10) is turned on, the noise filter takes effect.
The off-status noise filter disables I/O response time setting.
After switching on or off the switch 1, reset the power supply of the CPU module.

＊2: Set an input response time in "I/O response time" combo box of PLC parameter in GX Developer. (Default: 0.2ms)
A response time setting value can be changed in GX Developer (SW6D5C-GPPW or later).
For the setting details, refer to Section 1.3.1.

＊3: The actual response time is 5μs delay when turning on, 10μs delay when turning off, because the hardware response time is added.
For the details of the CPU overhead time, refer to manuals for the CPU module used (Function Explanation, Program Fundamentals).

＊4: The module function can be changed according to the status of the function selector switch (switch 2) on the bottom of the module (refer to Chapter 10).
ON: High-speed input
OFF: Interrupt
If the function selector switch (switch 2) setting is changed while the CPU module is in RUN, an error (error code: 2100) occurs.

＊5: Indicates the noise immunity when the noise filter takes effect (the noise filter selector switch (switch 1) is turned on).

＊6: For the setting method, refer to Section 1.3.3.

External connection	QX90H (16 points)

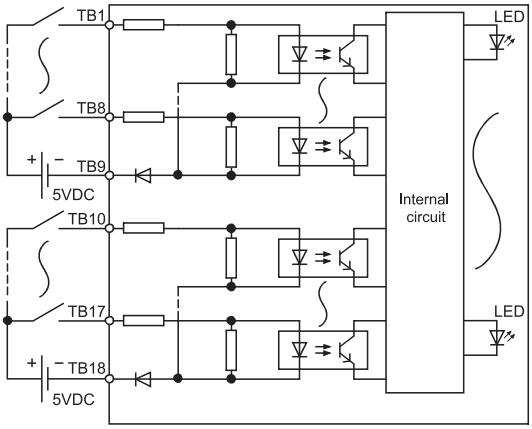

Terminal block No.	Signal name	Terminal block No.	Signal name
TB2	X01	TB1	X00
TB4	X03	TB3	X02
TB6	X05	TB5	X04
TB8	X07	TB7	X06
TB10	X08	TB9	COM1
TB12	X0A	TB11	X09
TB14	X0C	TB13	X0B
TB16	X0E	TB15	X0D
TB18	COM2	TB17	X0F

MEMO

3. OUTPUT MODULE SPECIFICATIONS

3.1 QY10 Contact Output Module

Specifications \ Type		Contact output module	
		QY10	Appearance
Number of output points		16 points	
Isolation method		Relay	
Rated switching voltage, current		24VDC 2A (resistive load) 240VAC 2A (cos ϕ =1) /point, 8A/common	
Minimum switching load		5VDC 1mA	
Maximum switching load		264VAC 125VDC	
Response time	OFF to ON	10ms or less	
	ON to OFF	12ms or less	
Life	Mechanical	20 million times or more	
	Electrical	Rated switching voltage/current load 100 thousand times or more	
		200VAC 1.5A, 240VAC 1A (COS ϕ =0.7) 100 thousand times or more 200VAC 0.4A, 240VAC 0.3A (COS ϕ =0.7) 300 thousand times or more	
		200VAC 1A, 240VAC 0.5A (COS ϕ =0.35) 100 thousand times or more 200VAC 0.3A, 240VAC 0.15A (COS ϕ =0.35) 300 thousand times or more	
		24VDC 1A, 100VDC 0.1A (L/R=7ms) 100 thousand times or more 24VDC 0.3A, 100VDC 0.03A (L/R=7ms) 300 thousand times or more	
Maximum switching frequency		3600 times/hour	
Surge suppressor		No	
Fuse		No	
Dielectric withstand voltage		2830VAC rms/3 cycles (altitude 2000m)	
Insulation resistance		10MΩ or more by insulation resistance tester	
Noise immunity		By noise simulator of 1500Vp-p noise voltage, 1 μs noise width and 25 to 60Hz noise frequency	
		First transient noise IEC61000-4-4: 1kV	
Protection degree		IP1X	
Common terminal arrangement		16 points/common (common terminal: TB17)	
Number of occupied I/O points		16 points (I/O assignment is set as a 16-point output module.)	
Operation indicator		ON indication (LED)	
External connections		18-point terminal block (M3×6 screws)	
Applicable wire size		0.3 to 0.75mm^2 core (2.8mm OD max.)	
Applicable crimping terminal		R1.25-3 (Sleeved crimping terminals cannot be used.)	
Internal current consumption (5VDC)		430mA (TYP. all points ON)	
Weight		0.22kg	

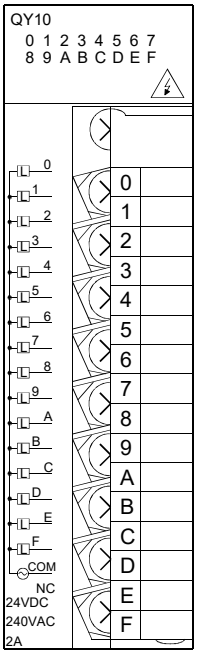

External connection

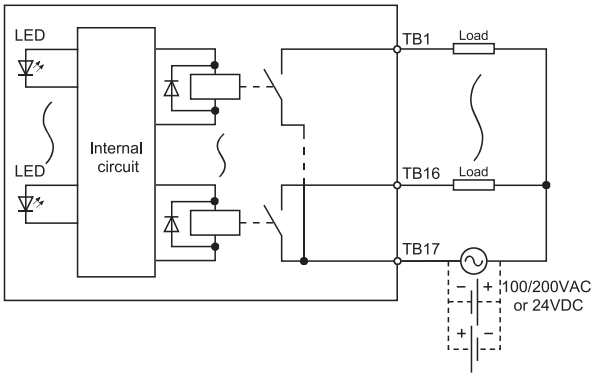

QY10 (16 points)

Terminal block No.	Signal name
TB1	Y00
TB2	Y01
TB3	Y02
TB4	Y03
TB5	Y04
TB6	Y05
TB7	Y06
TB8	Y07
TB9	Y08
TB10	Y09
TB11	Y0A
TB12	Y0B
TB13	Y0C
TB14	Y0D
TB15	Y0E
TB16	Y0F
TB17	COM
TB18	Vacant

3.2 QY10-TS Contact Output Module

This module is a spring clamp terminal block type and an output module that has indicators for checking the insertion state of wire.

Specifications \ Type		Contact output module	
		QY10-TS	Appearance
Number of output points		16 points	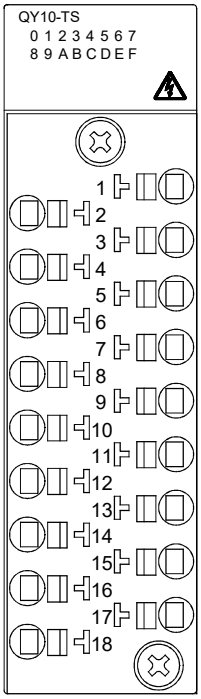
Isolation method		Relay	
Rated switching voltage, current		24VDC 2A (resistive load) 240VAC 2A (cos ϕ =1) /point, 8A/common	
Minimum switching load		5VDC 1mA	
Maximum switching load		264VAC 125VDC	
Response time	OFF to ON	10ms or less	
	ON to OFF	12ms or less	
Life	Mechanical	20 million times or more	
	Electrical	Rated switching voltage/current load 100 thousand times or more	
		200VAC 1.5A, 240VAC 1A (COS ϕ =0.7) 100 thousand times or more 200VAC 0.4A, 240VAC 0.3A (COS ϕ =0.7) 300 thousand times or more	
		200VAC 1A, 240VAC 0.5A (COS ϕ =0.35) 100 thousand times or more 200VAC 0.3A, 240VAC 0.15A (COS ϕ =0.35) 300 thousand times or more	
		24VDC 1A, 100VDC 0.1A (L/R=7ms) 100 thousand times or more 24VDC 0.3A, 100VDC 0.03A (L/R=7ms) 300 thousand times or more	
Maximum switching frequency		3600 times/hour	
Surge suppressor		No	
Fuse		No	
Dielectric withstand voltage		2830VAC rms/3 cycles (altitude 2000m)	
Insulation resistance		10MΩ or more by insulation resistance tester	
Noise immunity		By noise simulator of 1500Vp-p noise voltage, 1 μs noise width and 25 to 60Hz noise frequency	
		First transient noise IEC61000-4-4: 1kV	
Protection degree		IP2X	
Common terminal arrangement		16 points/common (common terminal: TB17)	
Number of occupied I/O points		16 points (I/O assignment is set as a 16-point output module.)	
Operation indicator		ON indication (LED)	
External connections		Two-piece spring clamp terminal block	
Applicable wire size		0.3 to 2.0mm2 core (22 to 15 AWG)	
Applicable crimping terminal		Refer to section 9.1	
Internal current consumption (5VDC)		430mA (TYP. all points ON)	
Weight		0.22kg	

External connection	QY10-TS (16 points)

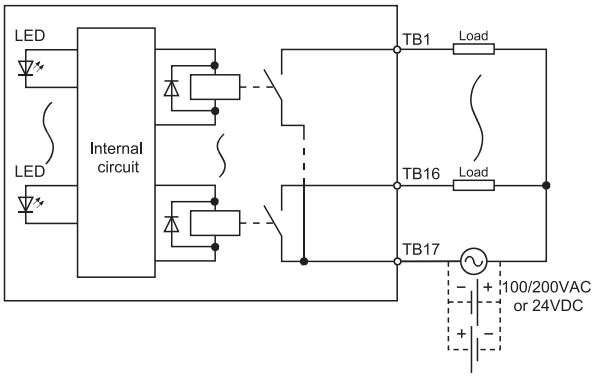

Terminal block No.	Signal name
TB1	Y00
TB2	Y01
TB3	Y02
TB4	Y03
TB5	Y04
TB6	Y05
TB7	Y06
RB8	Y07
TB9	Y08
RB10	Y09
TB11	Y0A
TB12	Y0B
TB13	Y0C
TB14	Y0D
TB15	Y0E
TB16	Y0F
TB17	COM
TB18	Vacant

3.3 QY18A Contact Output Module (All Points Independent)

Specifications \ Type		Contact output module (All points independent)	
		QY18A	Appearance
Number of output points		8 points	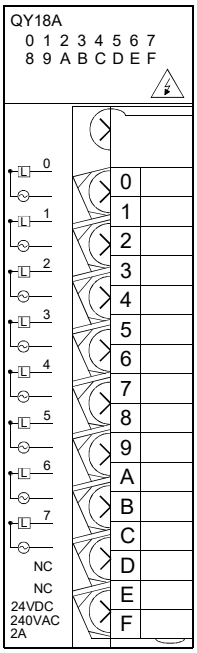
Isolation method		Relay isolation	
Rated switching voltage/current		24VDC 2A (resistive load) 240VAC 2A (cos ϕ =1) /point, 8A/unit	
Minimum switching load		5VDC 1mA	
Maximum switching load		264VAC 125VDC	
Response time	OFF to ON	10ms or shorter	
	ON to OFF	12ms or shorter	
Life	Mechanical	20 million cycles or more	
	Electrical	Rated switching voltage/current load: 100 thousand cycles or more	
		200VAC 1.5A, 240VAC 1A (COS ϕ =0.7) 100 thousand cycles or more 200VAC 0.4A, 240VAC 0.3A (COS ϕ =0.7) 300 thousand cycles or more	
		200VAC 1A, 240VAC 0.5A (COS ϕ =0.35) 100 thousand cycles or more 200VAC 0.3A, 240VAC 0.15A (COS ϕ =0.35) 300 thousand cycles or more	
		24VDC 1A, 100VDC 0.1A (L/R=7ms) 100 thousand cycles or more 24VDC 0.3A, 100VDC 0.03A (L/R=7ms) 300 thousand cycles or more	
Maximum switching frequency		3600 cycles/hour	
Surge suppressor		None	
Fuse		None	
Dielectric withstand voltage		2830VAC rms/3 cycles (altitude 2000m)	
Insulation resistance		10MΩ or more by insulation resistance tester	
Noise immunity		By noise simulator of 1500Vp-p noise voltage, 1 μs noise width and 25 to 60Hz noise frequency	
		First transient noise IEC61000-4-4: 1kV	
Protection degree		IP1X	
Number of occupied I/O points		16 points (I/O assignment is set as a 16-point output module.)	
Operation indicator		ON indication (LED)	
External connections		18-point terminal block (M3 × 6 screws)	
Applicable wire size		Core cable: 0.3 to 0.75mm^2 (Outside diameter: 2.8mm or smaller)	
Applicable crimping terminal		R1.25-3 (Sleeved crimping terminals cannot be used.)	
Internal current consumption (5VDC)		240mA (TYP. all points ON)	
Weight		0.22kg	

External connection	Terminal block No.	Signal name
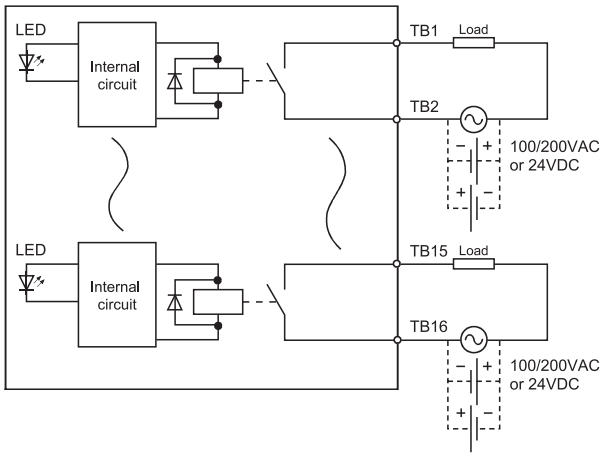	TB1	Y00
	TB2	
	TB3	Y01
	TB4	
	TB5	Y02
	TB6	
	TB7	Y03
	TB8	
	TB9	Y04
	TB10	
	TB11	Y05
	TB12	
	TB13	Y06
	TB14	
	TB15	Y07
	TB16	
	TB17	Vacant
	TB18	Vacant

3.4 QY22 TRIAC Output Module

Specifications \ Type		TRIAC output module	
		QY22	Appearance
Number of output points		16 points	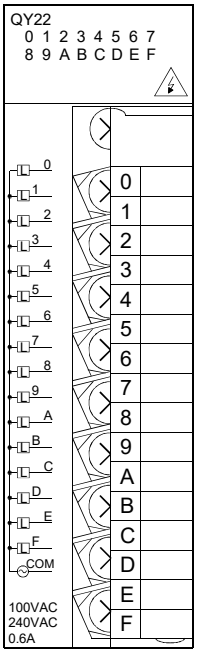
Isolation method		Photocoupler	
Rated load voltage		100 to 240VAC 50/60Hz ± 5%	
Load voltage distortion rate		Within 5%	
Maximum load voltage		264VAC	
Maximum load current		0.6A/point, 4.8A/common	
Minimum load voltage/current		24VAC 100mA, 100VAC 25mA, 240VAC 25mA	
Maximum rush current		20A/cycle or less	
Leakage current at OFF		3mA or lower (for 240V, 60Hz), 1.5mA or lower (for 120V, 60Hz)	
Maximum voltage drop at ON		1.5V or lower	
Response time	OFF to ON	1ms + 0.5 cycles or less	
	ON to OFF	1ms + 0.5 cycles or less (rated load, resistance load)	
Surge suppressor		CR absorber	
Fuse		None (Attaching a fuse to each external wiring is recommended. Refer to Section 1.2)	
Dielectric withstand voltage		2830VAC rms/3 cycles (altitude 2000m)	
Insulation resistance		10MΩ or higher by insulation resistance meter	
Noise immunity		By noise simulator of 1.5kVp-p noise voltage, 1 μs noise width and 25 to 60Hz noise frequency	
		First transient noise IEC61000-4-4: 1kV	
Protection degree		IP1X	
Common terminal arrangement		16 points/common (common terminal: TB17)	
Number of occupied I/O points		16 points (I/O assignment is set as a 16-point output module.)	
Operation indicator		ON indication (LED)	
External connections		18-point terminal block (M3 × 6 screws)	
Applicable wire size		Core cable: 0.3 to 0.75mm2 (Outside diameter: 2.8mm or smaller)	
Applicable crimping terminal		R1.25-3 (Sleeved crimping terminals cannot be used.)	
Internal current consumption (5VDC)		250mA (Max., all points ON)	
Weight		0.40kg	

External connection

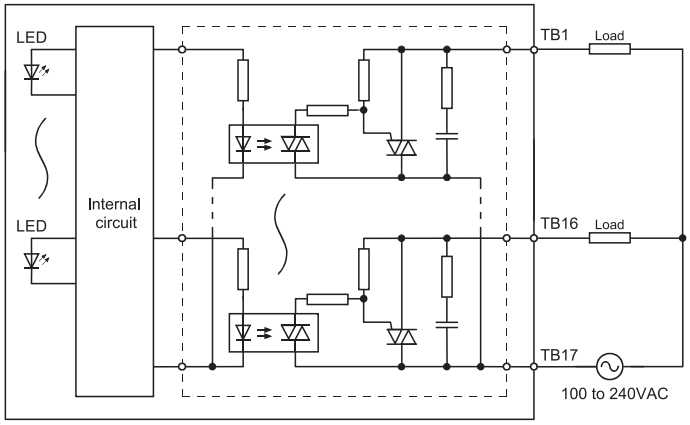

QY22 (16 points)

Terminal block No.	Signal name
TB1	Y00
TB2	Y01
TB3	Y02
TB4	Y03
TB5	Y04
TB6	Y05
TB7	Y06
TB8	Y07
TB9	Y08
TB10	Y09
TB11	Y0A
TB12	Y0B
TB13	Y0C
TB14	Y0D
TB15	Y0E
TB16	Y0F
TB17	COM
TB18	Vacant

POINT

Do not touch the module during turning on electricity and immediately after power supply interception. There is fear of a burn.

3.5 QY40P Transistor Output Module (Sink Type)

Specifications \ Type		Transistor output module (Sink type)	
		QY40P	Appearance
Number of output points		16 points	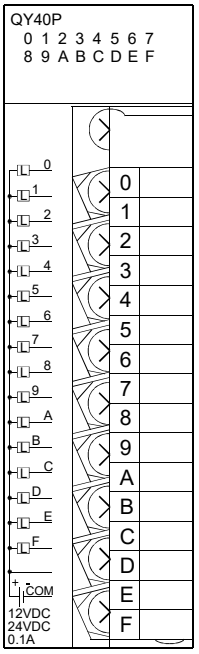
Isolation method		Photocoupler	
Rated load voltage		12-24VDC (+20/-15%)	
Maximum load current		0.1A/point, 1.6A/common	
Maximum inrush current		0.7A, 10ms or less	
Leakage current at OFF		0.1mA or less	
Maximum voltage drop at ON		0.1VDC (TYP.) 0.1A, 0.2VDC (MAX.) 0.1A	
Response time	OFF to ON	1ms or less	
	ON to OFF	1ms or less (rated load, resistive load)	
Surge suppressor		Zener diode	
Fuse		No	
External supply power	Voltage	12-24VDC (+20/-15%) (ripple ratio within 5%)	
	Current	MAX. 10mA (when 24VDC and all points are ON)	
Dielectric withstand voltage		560VAC rms/3 cycles (altitude 2000m)	
Insulation resistance		10MΩ or more by insulation resistance tester	
Noise immunity		By noise simulator of 500Vp-p noise voltage, 1 μs noise width and 25 to 60Hz noise frequency	
		First transient noise IEC61000-4-4: 1kV	
Protection degree		IP2X	
Common terminal arrangement		16 points/common (common terminal: TB18)	
Number of occupied I/O points		16 points (I/O assignment is set as a 16-point output module.)	
Protection function		Yes (overload protection function, overheat protection function) • Overheat protection function is activated in increments of 1 point. • Overload protection function is activated in increments of 1 point.	
Operation indicator		ON indication (LED)	
External connections		18-point terminal block (M3×6 screws)	
Applicable wire size		0.3 to 0.75mm² core (2.8mm OD max.)	
Applicable crimping terminal		R1.25-3 (Sleeved crimping terminals cannot be used.)	
Internal current consumption (5VDC)		65mA (TYP. all points ON) (0.07A is shown on the rating plate of the module.)	
Weight		0.16kg	

External connection	QY40P (16 points)

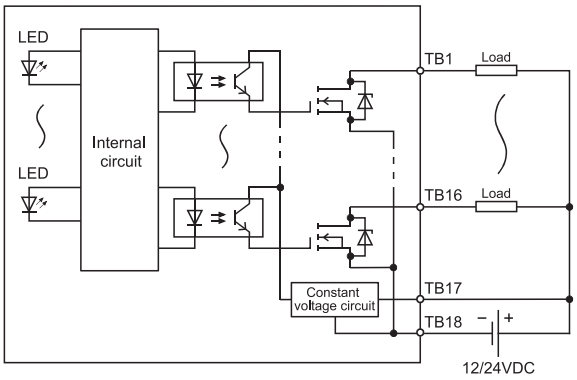

Terminal block No.	Signal name	Terminal block No.	Signal name
TB2	Y01	TB1	Y00
TB4	Y03	TB3	Y02
TB6	Y05	TB5	Y04
TB8	Y07	TB7	Y06
TB10	Y09	TB9	Y08
TB12	Y0B	TB11	Y0A
TB14	Y0D	TB13	Y0C
TB16	Y0F	TB15	Y0E
TB18	COM	TB17	12/24VDC

3.6 QY40P-TS Transistor Output Module (Sink Type)

This module is a spring clamp terminal block type and an output module that has indicators for checking the insertion state of wire.

Specifications \ Type		Transistor output module (Sink type)	
		QY40P-TS	Appearance
Number of output points		16 points	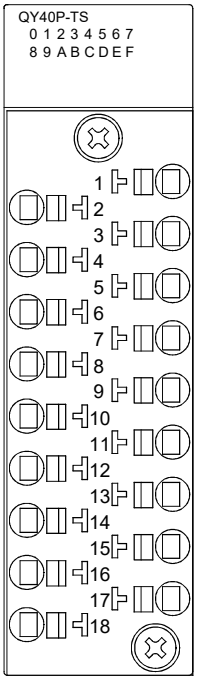
Isolation method		Photocoupler	
Rated load voltage		12-24VDC (+20/-15%)	
Maximum load current		0.1A/point, 1.6A/common	
Maximum inrush current		0.7A, 10ms or less	
Leakage current at OFF		0.1mA or less	
Maximum voltage drop at ON		0.1VDC (TYP.) 0.1A, 0.2VDC (MAX.) 0.1A	
Response time	OFF to ON	1ms or less	
	ON to OFF	1ms or less (rated load, resistive load)	
Surge suppressor		Zener diode	
Fuse		No	
External supply power	Voltage	12-24VDC (+20/-15%) (ripple ratio within 5%)	
	Current	MAX. 10mA (when 24VDC and all points are ON)	
Dielectric withstand voltage		560VAC rms/3 cycles (altitude 2000m)	
Insulation resistance		10MΩ or more by insulation resistance tester	
Noise immunity		By noise simulator of 500Vp-p noise voltage, 1 μs noise width and 25 to 60Hz noise frequency	
		First transient noise IEC61000-4-4: 1kV	
Protection degree		IP2X	
Common terminal arrangement		16 points/common (common terminal: TB18)	
Number of occupied I/O points		16 points (I/O assignment is set as a 16-point output module.)	
Protection function		Yes (overload protection function, overheat protection function) • Overheat protection function is activated in increments of 1 point. • Overload protection function is activated in increments of 1 point.	
Operation indicator		ON indication (LED)	
External connections		Two-piece spring clamp terminal block	
Applicable wire size		0.3 to 2.0mm2 core (22 to 15 AWG)	
Applicable crimping terminal		Refer to section 9.1	
Internal current consumption (5VDC)		65mA (TYP. all points ON) (0.07A is shown on the rating plate of the module.)	
Weight		0.16kg	

External connection	QY40P-TS (16 points)

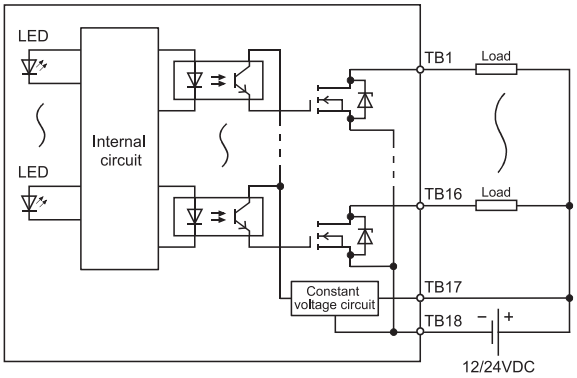

Terminal block No.	Signal name
TB1	Y00
TB2	Y01
TB3	Y02
TB4	Y03
TB5	Y04
TB6	Y05
TB7	Y06
RB8	Y07
TB9	Y08
RB10	Y09
TB11	Y0A
TB12	Y0B
TB13	Y0C
TB14	Y0D
TB15	Y0E
TB16	Y0F
TB17	12/24VDC
TB18	COM

3.7 QY41H Transistor High-speed Output Module (Sink Type)

Specifications \ Type		Transistor high-speed output module (Sink type)	
		QY41H	Appearance
Number of output points		32 points	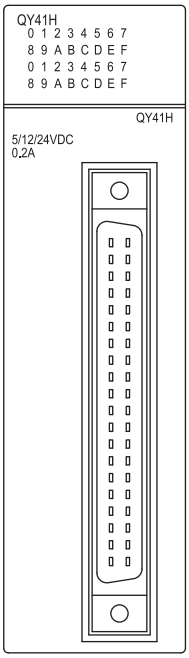
Isolation method		Photocoupler	
Rated load voltage		5-24VDC (+20/-15%)	
Maximum load current		0.2A/point, 2A/common	
Maximum inrush current		0.7A, 10ms or less	
Leakage current at OFF		0.1mA or less	
Maximum voltage drop at ON		0.1VDC (TYP.) 0.1A, 0.2VDC (MAX.) 0.1A	
Response time	OFF to ON	2μs or less	
	ON to OFF	2μs or less (rated load, resistive load)	
Surge suppressor		Zener diode	
Fuse		None (Attaching a fuse to external wiring is recommended.)	
Dielectric withstand voltage		560VAC rms/3 cycles (altitude 2000m)	
Insulation resistance		10MΩ or more by insulation resistance tester	
Noise immunity		By noise simulator of 500Vp-p noise voltage, 1μs noise width and 25 to 60Hz noise frequency	
		First transient noise IEC61000-4-4: 1kV	
Protection degree		IP2X	
Common terminal arrangement		32 points/common (common terminal: A01, A02)	
Number of occupied I/O points		32 points (I/O assignment is set as a 32-point output module.)	
Operation indicator		ON indication (LED)	
External connections		40-pin connector	
Applicable wire size		0.088 to 0.3mm^2 (For A6CON1 or A6CON4) ＊1	
Applicable connector		A6CON1, A6CON2, A6CON3, A6CON4 (optional)	
Applicable connector/terminal block converter module		A6TBXY36, A6TBXY54	
Internal current consumption (5VDC)		370mA (TYP. all points ON)	
Weight		0.10kg	

External connection

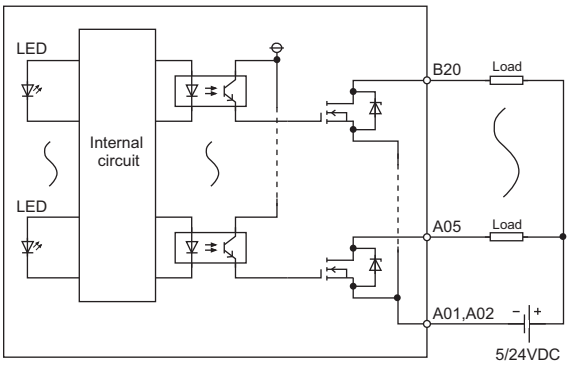

Pin-Outs

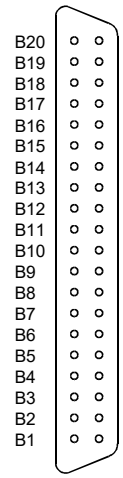

Module front view

Pin No.	Signal No.	Pin No.	Signal No.
B20	Y00	A20	Y10
B19	Y01	A19	Y11
B18	Y02	A18	Y12
B17	Y03	A17	Y13
B16	Y04	A16	Y14
B15	Y05	A15	Y15
B14	Y06	A14	Y16
B13	Y07	A13	Y17
B12	Y08	A12	Y18
B11	Y09	A11	Y19
B10	Y0A	A10	Y1A
B09	Y0B	A09	Y1B
B08	Y0C	A08	Y1C
B07	Y0D	A07	Y1D
B06	Y0E	A06	Y1E
B05	Y0F	A05	Y1F
B04	Vacant	A04	Vacant
B03	Vacant	A03	Vacant
B02	Vacant	A02	COM
B01	Vacant	A01	COM

＊1: When using A6CON2 or A6CON3, refer to Chapter 7.

3.8 QY41P Transistor Output Module (Sink Type)

Specifications \ Type		Transistor output module (Sink type)	
		QY41P	Appearance
Number of output points		32 points	
Isolation method		Photocoupler	
Rated load voltage		12-24VDC (+20/-15%)	
Maximum load current		0.1A/point, 2A/common	
Maximum inrush current		0.7A, 10ms or less	
Leakage current at OFF		0.1mA or less	
Maximum voltage drop at ON		0.1VDC (TYP.) 0.1A, 0.2VDC (MAX.) 0.1A	
Response time	OFF to ON	1ms or less	
	ON to OFF	1ms or less (rated load, resistive load)	
Surge suppressor		Zener diode	
Fuse		No	
External supply power	Voltage	12-24VDC (+20/-15%) (ripple ratio within 5%)	
	Current	20mA (at 24VDC)	
Dielectric withstand voltage		560VAC rms/3 cycles (altitude 2000m)	
Insulation resistance		10MΩ or more by insulation resistance tester	
Noise immunity		By noise simulator of 500Vp-p noise voltage, 1 μs noise width and 25 to 60Hz noise frequency	
		First transient noise IEC61000-4-4: 1kV	
Protection degree		IP2X	
Common terminal arrangement		32 points/common (common terminal: A01, A02)	
Number of occupied I/O points		32 points (I/O assignment is set as a 32-point output module.)	
Protection function		Yes (overheat protection function, overload protection function) • Overheat protection function is activated in increments of 1 point. • Overload protection function is activated in increments of 1 point.	
Operation indicator		ON indication (LED)	
External connections		40-pin connector	
Applicable wire size		0.088 to 0.3mm^2 (For A6CON1 or A6CON4) * 1	
Applicable connector		A6CON1, A6CON2, A6CON3, A6CON4 (optional)	
Applicable connector/terminal block converter module		A6TBXY36, A6TBXY54	
Internal current consumption (5VDC)		105mA (TYP. all points ON) (0.11A is shown on the rating plate of the module.)	
Weight		0.15kg	

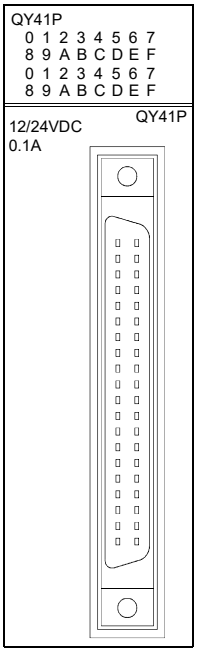

External connection

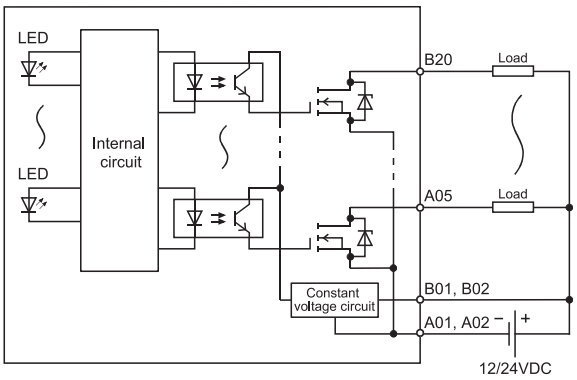

Pin-Outs

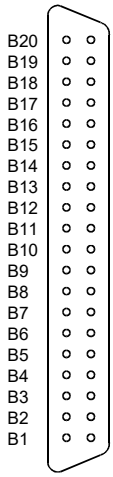

Module front view

Pin No.	Signal No.	Pin No.	Signal No.
B20	Y00	A20	Y10
B19	Y01	A19	Y11
B18	Y02	A18	Y12
B17	Y03	A17	Y13
B16	Y04	A16	Y14
B15	Y05	A15	Y15
B14	Y06	A14	Y16
B13	Y07	A13	Y17
B12	Y08	A12	Y18
B11	Y09	A11	Y19
B10	Y0A	A10	Y1A
B09	Y0B	A09	Y1B
B08	Y0C	A08	Y1C
B07	Y0D	A07	Y1D
B06	Y0E	A06	Y1E
B05	Y0F	A05	Y1F
B04	Vacant	A04	Vacant
B03	Vacant	A03	Vacant
B02	12/24 VDC	A02	COM
B01	12/24 VDC	A01	COM

* 1: When using A6CON2 or A6CON3, refer to Chapter 7.

3.9 QY42P Transistor Output Module (Sink Type)

Specifications \ Type		Transistor output module (Sink type) QY42P
Number of output points		64 points
Isolation method		Photocoupler
Rated load voltage		12-24VDC (+20/-15%)
Maximum load current		0.1A/point, 2A/common
Maximum inrush current		0.7A, 10ms or less
Leakage current at OFF		0.1mA or less
Maximum voltage drop at ON		0.1VDC (TYP.) 0.1A, 0.2VDC (MAX.) 0.1A
Response time	OFF to ON	1ms or less
	ON to OFF	1ms or less (rated load, resistive load)
Surge suppressor		Zener diode
Fuse		No
External supply power	Voltage	12-24VDC (+20/-15%) (ripple ratio within 5%)
	Current	20mA (at 24VDC)/common
Dielectric withstand voltage		560VAC rms/3 cycles (altitude 2000m)
Insulation resistance		10MΩ or more by insulation resistance tester
Noise immunity		By noise simulator of 500Vp-p noise voltage, 1 μs noise width and 25 to 60Hz noise frequency
		First transient noise IEC61000-4-4: 1kV
Protection degree		IP2X
Common terminal arrangement		32 points/common (common terminal: 1A01, 1A02, 2A01, 2A02)
Number of occupied I/O points		64 points (I/O assignment is set as a 64-point output module.)
Protection function		Yes (overheat protection function, overload protection function) • Overheat protection function is activated in increments of 1 point. • Overload protection function is activated in increments of 1 point.
Operation indicator		ON indication (LED), 32 point switch-over using switch
External connections		40-pin connector
Applicable wire size		0.088 to 0.3mm^2 (For A6CON1 or A6CON4) ＊3
Applicable connector		A6CON1, A6CON2, A6CON3, A6CON4 (optional)
Applicable connector/terminal block converter module		A6TBXY36, A6TBXY54
Internal current consumption (5VDC)		150mA (TYP. all points ON)
Weight		0.17kg

Appearance

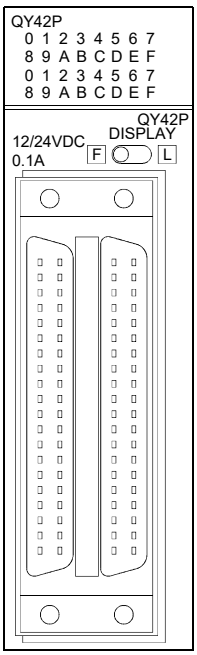

External connection

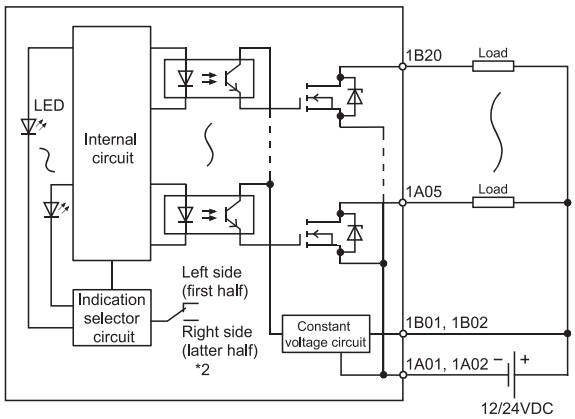

The above diagram shows the first half of 32 points (F).
The latter half of 32 points (L) are similar.

Pin-Outs

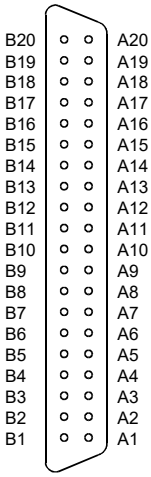

Module front view

Pin No. ＊1	Signal No.	Pin No. ＊1	Signal No.	Pin No. ＊1	Signal No.	Pin No. ＊1	Signal No.
1B20	Y00	1A20	Y10	2B20	Y20	2A20	Y30
1B19	Y01	1A19	Y11	2B19	Y21	2A19	Y31
1B18	Y02	1A18	Y12	2B18	Y22	2A18	Y32
1B17	Y03	1A17	Y13	2B17	Y23	2A17	Y33
1B16	Y04	1A16	Y14	2B16	Y24	2A16	Y34
1B15	Y05	1A15	Y15	2B15	Y25	2A15	Y35
1B14	Y06	1A14	Y16	2B14	Y26	2A14	Y36
1B13	Y07	1A13	Y17	2B13	Y27	2A13	Y37
1B12	Y08	1A12	Y18	2B12	Y28	2A12	Y38
1B11	Y09	1A11	Y19	2B11	Y29	2A11	Y39
1B10	Y0A	1A10	Y1A	2B10	Y2A	2A10	Y3A
1B09	Y0B	1A09	Y1B	2B09	Y2B	2A09	Y3B
1B08	Y0C	1A08	Y1C	2B08	Y2C	2A08	Y3C
1B07	Y0D	1A07	Y1D	2B07	Y2D	2A07	Y3D
1B06	Y0E	1A06	Y1E	2B06	Y2E	2A06	Y3E
1B05	Y0F	1A05	Y1F	2B05	Y2F	2A05	Y3F
1B04	Vacant	1A04	Vacant	2B04	Vacant	2A04	Vacant
1B03	Vacant	1A03	Vacant	2B03	Vacant	2A03	Vacant
1B02	12/24V DC	1A02	COM1	2B02	12/24V DC	2A02	COM2
1B01	12/24V DC	1A01	COM1	2B01	12/24V DC	2A01	COM2

＊1: Pin number of 1 □□□ indicates that of the left-hand side connector, and pin number of 2 □□□ indicates that of the right-hand side connector.
＊2: Selection of left-hand (F) side provides the first half (Y00 to Y1F) LED indications, and selection of right-hand (L) side provides the latter half (Y20 to Y3F) LED indications.
＊3: When using A6CON2 or A6CON3, refer to Chapter 7.

3.10 QY50 Transistor Output Module (Sink Type)

Specifications \ Type		Transistor output module (Sink type)	
		QY50	Appearance
Number of output points		16 points	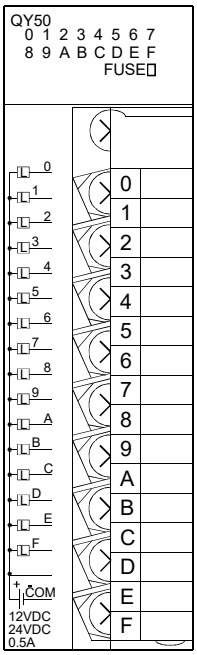
Isolation method		Photocoupler	
Rated load voltage		12-24VDC (+20/-15%)	
Maximum load current		0.5A/point, 4A/common	
Maximum inrush current		4A, 10ms or less	
Leakage current at OFF		0.1mA or less	
Maximum voltage drop at ON		0.2VDC (TYP.) 0.5A, 0.3VDC (MAX.) 0.5A	
Response time	OFF to ON	1ms or less	
	ON to OFF	1ms or less (rated load, resistive load)	
Surge suppressor		Zener diode	
Fuse		6.7A (unchangeable) (fuse capacity: 50A)	
Fuse blow indication		Provided (When a fuse blows, LED turns on and a signal is output to the CPU module.) ＊1	
External supply power	Voltage	12-24VDC (+20/-15%) (ripple ratio within 5%)	
	Current	20mA (at 24VDC)	
Dielectric withstand voltage		560VAC rms/3 cycles (altitude 2000m)	
Insulation resistance		10MΩ or more by insulation resistance tester	
Noise immunity		By noise simulator of 500Vp-p noise voltage, 1 μs noise width and 25 to 60Hz noise frequency	
		First transient noise IEC61000-4-4: 1kV	
Protection degree		IP2X	
Common terminal arrangement		16 points/common (common terminal: TB18)	
Number of occupied I/O points		16 points (I/O assignment is set as a 16-point output module.)	
Operation indicator		ON indication (LED)	
External connections		18-point terminal block (M3×6 screws)	
Applicable wire size		0.3 to 0.75mm^2 core (2.8mm OD max.)	
Applicable crimping terminal		R1.25-3 (Sleeved crimping terminals cannot be used.)	
Internal current consumption (5VDC)		80mA (TYP. all points ON)	
Weight		0.17kg	

＊1: Fuse blown is not detected when the external power supply is shut off.

External connection	QY50 (16 points)

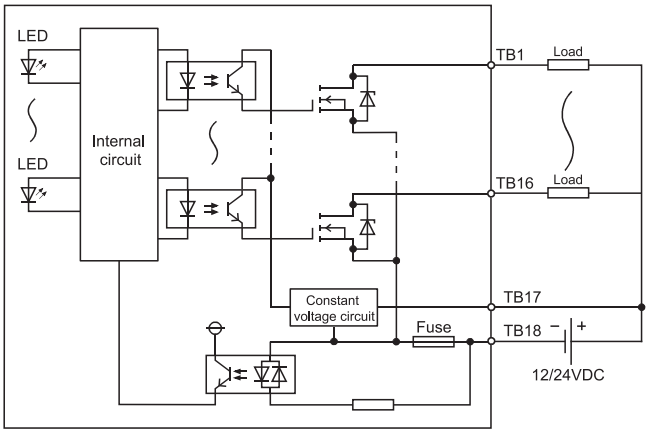

Terminal block No.	Signal name
TB1	Y00
TB2	Y01
TB3	Y02
TB4	Y03
TB5	Y04
TB6	Y05
TB7	Y06
TB8	Y07
TB9	Y08
TB10	Y09
TB11	Y0A
TB12	Y0B
TB13	Y0C
TB14	Y0D
TB15	Y0E
TB16	Y0F
TB17	12/24VDC
TB18	COM

3.11 QY68A Transistor Output Module (All Points Independent, Sink/Source Type)

Specifications \ Type		Transistor output module (All points independent, sink/source type)	
		QY68A	Appearance
Number of output points		8 points	
Isolation method		Photocoupler	
Rated load voltage		5-24VDC (+20/-10%)	
Maximum load current		2A/point, 8A/unit	
Maximum inrush current		8A, 10ms or less	
Leakage current at OFF		0.1mA or less	
Maximum voltage drop at ON		0.3VDC (MAX.) 2A	
Response time	OFF to ON	3ms or less	
	ON to OFF	10ms or less (resistive load)	
Surge suppressor		Zener diode	
Fuse		None (Attaching a fuse to external wiring is recommended. Refer to Section 1.2)	
External supply power		None	
Dielectric withstand voltage		560VAC rms/3 cycles (altitude 2000m)	
Insulation resistance		10MΩ or more by insulation resistance tester	
Noise immunity		By noise simulator of 500Vp-p noise voltage, 1 μs noise width and 25 to 60Hz noise frequency	
		First transient noise IEC61000-4-4: 1kV	
Protection degree		IP2X	
Common terminal arrangement		All points Independent	
Number of occupied I/O points		16 points (I/O assignment is set as a 16-point output module.)	
Operation indicator		ON indication (LED)	
External connections		18-point terminal block (M3×6 screws)	
Applicable wire size		0.3 to 0.75mm² core (2.8mm OD max.)	
Applicable crimping terminal		R1.25-3 (Sleeved crimping terminals cannot be used.)	
Internal current consumption (5VDC)		110mA (TYP. all points ON)	
Weight		0.14kg	

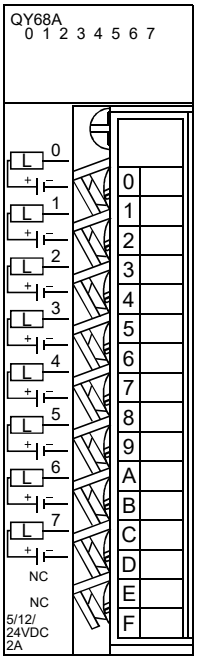

External connection	Terminal block No.	Signal name
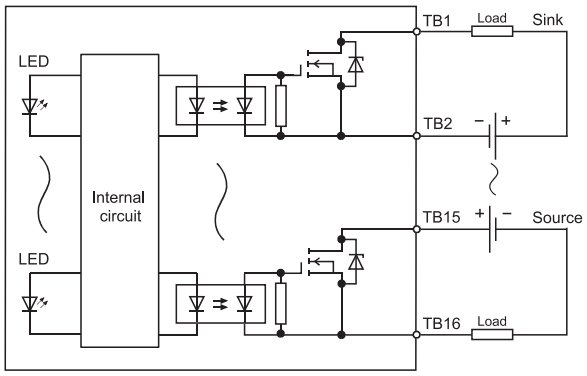	TB1	Y00
	TB2	
	TB3	Y01
	TB4	
	TB5	Y02
	TB6	
	TB7	Y03
	TB8	
	TB9	Y04
	TB10	
	TB11	Y05
	TB12	
	TB13	Y06
	TB14	
	TB15	Y07
	TB16	
	TB17	Vacant
	TB18	Vacant

3.12 QY70 Transistor Output Module (Sink Type)

Specifications \ Type		Transistor output module (Sink type)	
		QY70	Appearance
Number of output points		16 points	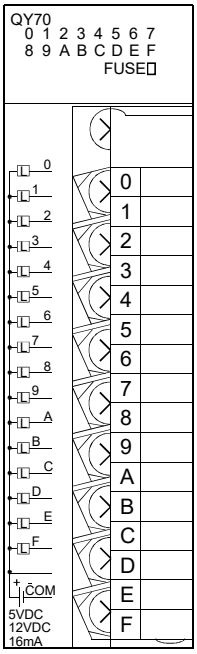
Isolation method		Photocoupler	
Rated load voltage		5/12VDC (+25/-10%)	
Maximum load current		16mA/point, 256mA/common	
Maximum inrush current		40mA, 10ms or less	
Output voltage at OFF		V_{OH}: 3.5VDC (V_{CC}=5VDC, I_{OH}=0.4mA)	
Maximum voltage drop at ON		V_{OL}: 0.3VDC	
Response time	OFF to ON	0.5ms or less	
	ON to OFF	0.5ms or less (resistive load)	
Surge suppressor		None	
Fuse		1.6A (unchangeable) (fuse capacity: 50A)	
Fuse blown indicator		Provided (When a fuse blows, LED turns on and a signal is output to the CPU module.) ＊1	
External supply power	Voltage	5 to 12VDC (+25/-10%) (ripple ratio within 5%)	
	Current	MAX. 90mA (when 12VDC and all points are ON)	
Dielectric withstand voltage		560VAC rms/3 cycles (altitude 2000m)	
Insulation resistance		10MΩ or more by insulation resistance tester	
Noise immunity		By noise simulator of 500Vp-p noise voltage, 1 μs noise width and 25 to 60Hz noise frequency	
		First transient noise IEC61000-4-4: 1kV	
Protection degree		IP2X	
Common terminal arrangement		16 points/common (common terminal: TB18)	
Number of occupied I/O points		16 points (I/O assignment is set as a 16-point output module.)	
Operation indicator		ON indication (LED)	
External connections		18-point terminal block (M3×6 screws)	
Applicable wire size		0.3 to 0.75mm^2 core (2.8mm OD max.)	
Applicable crimping terminal		R1.25-3 (Sleeved crimping terminals cannot be used.)	
Internal current consumption (5VDC)		95mA (TYP. all points ON) (0.10A is shown on the rating plate of the module.)	
Weight		0.14kg	

＊1: Fuse blown is not detected when the external power supply is shut off.

External connection	QY70 (16 points)

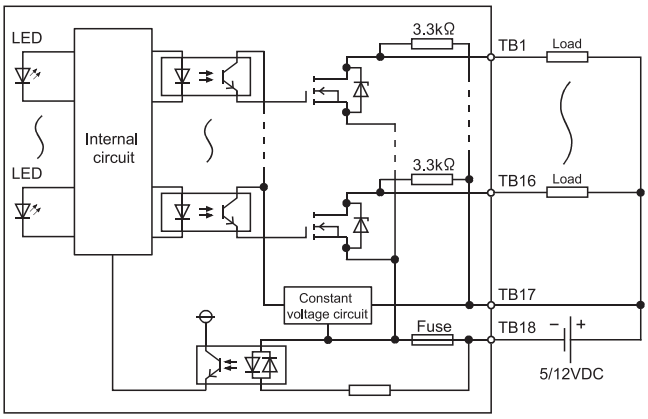

Terminal block No.	Signal name
TB1	Y00
TB2	Y01
TB3	Y02
TB4	Y03
TB5	Y04
TB6	Y05
TB7	Y06
TB8	Y07
TB9	Y08
TB10	Y09
TB11	Y0A
TB12	Y0B
TB13	Y0C
TB14	Y0D
TB15	Y0E
TB16	Y0F
TB17	5/12VDC
TB18	COM

3.13 QY71 Transistor Output Module (Sink Type)

Specifications \ Type		Transistor output module (Sink type)	
		QY71	Appearance
Number of output points		32 points	
Isolation method		Photocoupler	
Rated load voltage		5/12VDC (+25/-10%)	
Maximum load current		16mA/point, 512mA/common	
Maximum inrush current		40mA, 10ms or less	
Output voltage at OFF		V_{OH}: 3.5VDC (V_{CC}=5VDC, I_{OH}=0.4mA)	
Maximum voltage drop at ON		V_{OL}: 0.3VDC	
Response time	OFF to ON	0.5ms or less	
	ON to OFF	0.5ms or less (resistive load)	
Surge suppressor		None	
Fuse		1.6A (unchangeable) (fuse capacity: 50A)	
Fuse blown indicator		Provided (When a fuse blows, LED turns on and a signal is output to the CPU module.) ＊1	
External supply power	Voltage	5 to 12VDC (+25/-10%) (ripple ratio within 5%)	
	Current	MAX. 170mA (when 12VDC and all points are ON)	
Dielectric withstand voltage		560VAC rms/3 cycles (altitude 2000m)	
Insulation resistance		10MΩ or more by insulation resistance tester	
Noise immunity		By noise simulator of 500Vp-p noise voltage, 1 μs noise width and 25 to 60Hz noise frequency	
		First transient noise IEC61000-4-4: 1kV	
Protection degree		IP2X	
Common terminal arrangement		32 points/common (common terminal: A01, A02)	
Number of occupied I/O points		32 points (I/O assignment is set as a 32-point output module.)	
Operation indicator		ON indication (LED)	
External connections		40-pin connector	
Applicable wire size		0.088 to 0.3mm^2 (For A6CON1 or A6CON4) ＊2	
Applicable connector		A6CON1, A6CON2, A6CON3, A6CON4 (optional)	
Internal current consumption (5VDC)		150mA (TYP. all points ON)	
Weight		0.14kg	

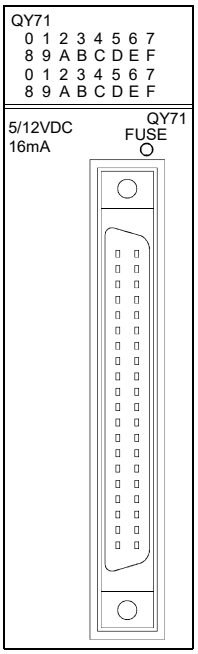

External connection

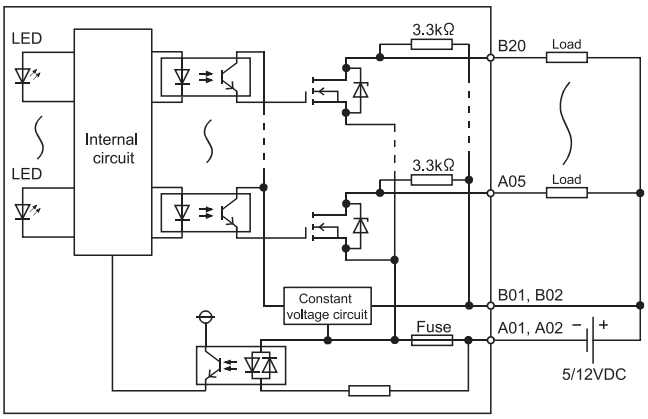

Pin-Outs

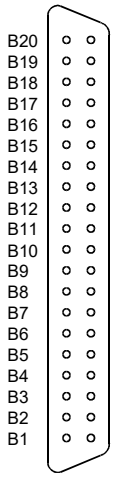

Module front view

Pin No.	Signal No.	Pin No.	Signal No.
B20	Y00	A20	Y10
B19	Y01	A19	Y11
B18	Y02	A18	Y12
B17	Y03	A17	Y13
B16	Y04	A16	Y14
B15	Y05	A15	Y15
B14	Y06	A14	Y16
B13	Y07	A13	Y17
B12	Y08	A12	Y18
B11	Y09	A11	Y19
B10	Y0A	A10	Y1A
B09	Y0B	A09	Y1B
B08	Y0C	A08	Y1C
B07	Y0D	A07	Y1D
B06	Y0E	A06	Y1E
B05	Y0F	A05	Y1F
B04	Vacant	A04	Vacant
B03	Vacant	A03	Vacant
B02	5/12 VDC	A02	COM
B01	5/12 VDC	A01	COM

＊1: Fuse blown is not detected when the external power supply is shut off.
＊2: When using A6CON2 or A6CON3, refer to Chapter 7.

3.14 QY80 Transistor Output Module (Source Type)

Specifications \ Type		Transistor output module (Source Type)	
		QY80	Appearance
Number of output points		16 points	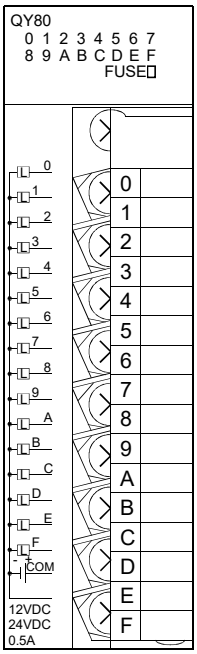
Isolation method		Photocoupler	
Rated load voltage		12-24VDC (+20/-15%)	
Maximum load current		0.5A/point, 4A/common	
Maximum inrush current		4A, 10ms or less	
Leakage current at OFF		0.1mA or less	
Maximum voltage drop at ON		0.2VDC (TYP.) 0.5A, 0.3VDC (MAX.) 0.5A	
Response time	OFF to ON	1ms or less	
	ON to OFF	1ms or less (rated load, resistive load)	
Surge suppressor		Zener diode	
Fuse		6.7A (unchangeable) (fuse capacity: 50A)	
Fuse blown indicator		Provided (When a fuse blows, LED turns on and a signal is output to the CPU module.) ＊1	
External supply power	Voltage	12-24VDC (+20/-15%) (ripple ratio within 5%)	
	Current	20mA (at 24VDC)	
Dielectric withstand voltage		560VAC rms/3 cycles (altitude 2000m)	
Insulation resistance		10MΩ or more by insulation resistance tester	
Noise immunity		By noise simulator of 500Vp-p noise voltage, 1 μs noise width and 25 to 60Hz noise frequency	
		First transient noise IEC61000-4-4: 1kV	
Protection degree		IP2X	
Common terminal arrangement		16 points/common (common terminal: TB17)	
Number of occupied I/O points		16 points (I/O assignment is set as a 16-point output module.)	
Operation indicator		ON indication (LED)	
External connections		18-point terminal block (M3×6 screws)	
Applicable wire size		0.3 to 0.75mm^2 core (2.8mm OD max.)	
Applicable crimping terminal		R1.25-3 (Sleeved crimping terminals cannot be used.)	
Internal current consumption (5VDC)		80mA (TYP. all points ON)	
Weight		0.17kg	

＊1: Fuse blown is not detected when the external power supply is shut off.

External connection	QY80 (16 points)

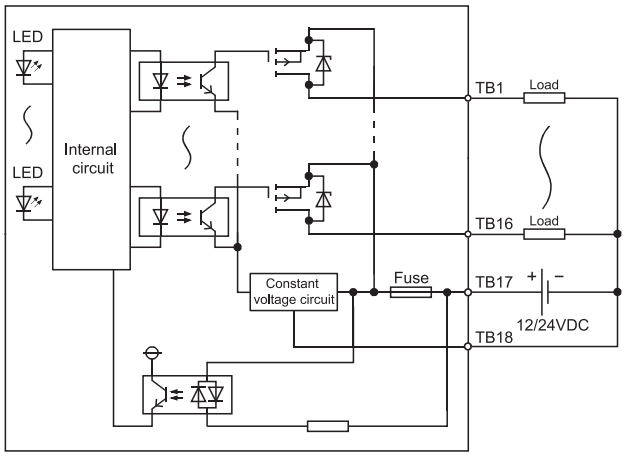

Terminal block No.	Signal name
TB1	Y00
TB2	Y01
TB3	Y02
TB4	Y03
TB5	Y04
TB6	Y05
TB7	Y06
TB8	Y07
TB9	Y08
TB10	Y09
TB11	Y0A
TB12	Y0B
TB13	Y0C
TB14	Y0D
TB15	Y0E
TB16	Y0F
TB17	COM
TB18	0VDC

3.15 QY80-TS Transistor Output Module (Source Type)

This module is a spring clamp terminal block type and an output module that has indicators for checking the insertion state of wire.

Specifications \ Type		Transistor output module (Source Type)	
		QY80-TS	Appearance
Number of output points		16 points	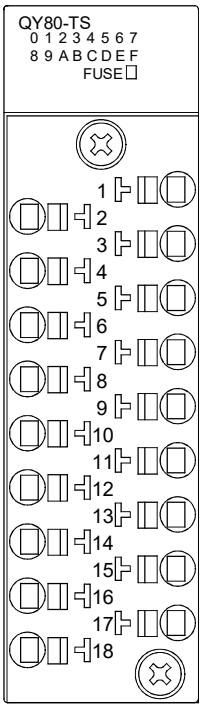
Isolation method		Photocoupler	
Rated load voltage		12-24VDC (+20/-15%)	
Maximum load current		0.5A/point, 4A/common	
Maximum inrush current		4A, 10ms or less	
Leakage current at OFF		0.1mA or less	
Maximum voltage drop at ON		0.2VDC (TYP.) 0.5A, 0.3VDC (MAX.) 0.5A	
Response time	OFF to ON	1ms or less	
	ON to OFF	1ms or less (rated load, resistive load)	
Surge suppressor		Zener diode	
Fuse		6.7A (unchangeable) (fuse capacity: 50A)	
Fuse blown indicator		Provided (When a fuse blows, LED turns on and a signal is output to the CPU module.) ＊1	
External supply power	Voltage	12-24VDC (+20/-15%) (ripple ratio within 5%)	
	Current	20mA (at 24VDC)	
Dielectric withstand voltage		560VAC rms/3 cycles (altitude 2000m)	
Insulation resistance		10MΩ or more by insulation resistance tester	
Noise immunity		By noise simulator of 500Vp-p noise voltage, 1 μs noise width and 25 to 60Hz noise frequency	
		First transient noise IEC61000-4-4: 1kV	
Protection degree		IP2X	
Common terminal arrangement		16 points/common (common terminal: TB17)	
Number of occupied I/O points		16 points (I/O assignment is set as a 16-point output module.)	
Operation indicator		ON indication (LED)	
External connections		Two-piece spring clamp terminal block	
Applicable wire size		0.3 to 2.0mm2 core (22 to 15 AWG)	
Applicable crimping terminal		Refer to section 9.1	
Internal current consumption (5VDC)		80mA (TYP. all points ON)	
Weight		0.17kg	

＊1: Fuse blown is not detected when the external power supply is shut off.

External connection	QY80-TS (16 points)

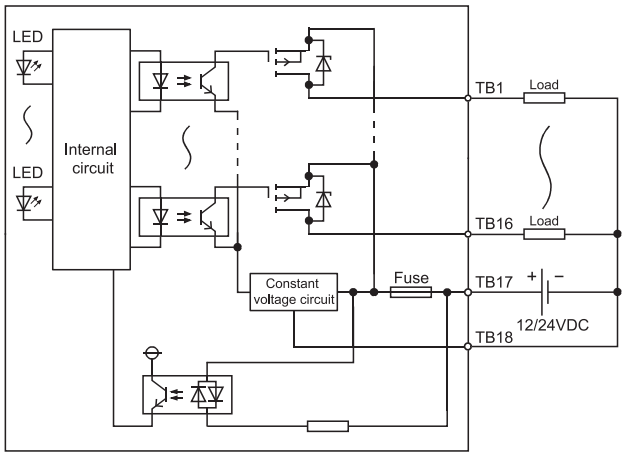

Terminal block No.	Signal name
TB1	Y00
TB2	Y01
TB3	Y02
TB4	Y03
TB5	Y04
TB6	Y05
TB7	Y06
RB8	Y07
TB9	Y08
RB10	Y09
TB11	Y0A
TB12	Y0B
TB13	Y0C
TB14	Y0D
TB15	Y0E
TB16	Y0F
TB17	COM
TB18	0VDC

3.16 QY81P Transistor Output Module (Source Type)

Specifications \ Type		Transistor output module (Source type)	
		QY81P	Appearance
Number of output points		32 points	
Isolation method		Photocoupler	
Rated load voltage		12-24VDC (+20/-15%)	
Maximum load current		0.1A/1point, Pilot Duty, 2A/common	
Maximum inrush current		0.7A, 10ms or less	
Leakage current at OFF		0.1mA or less	
Maximum voltage drop at ON		0.1VDC (TYP.) 0.1A, 0.2VDC (MAX.) 0.1A	
Response time	OFF to ON	1ms or less	
	ON to OFF	1ms or less (rated load, resistive load)	
Surge suppressor		Zener diode	
Fuse		No	
External supply power	Voltage	12-24VDC (+20/-15%) (ripple ratio within 5%)	
	Current	40mA (at 24VDC)	
Dielectric withstand voltage		560VAC rms/3 cycles (altitude 2000m)	
Insulation resistance		10MΩ or more by insulation resistance tester	
Noise immunity		By noise simulator of 500Vp-p noise voltage, 1 μs noise width and 25 to 60Hz noise frequency	
		First transient noise IEC61000-4-4: 1kV	
Protection degree		IP2X	
Common terminal arrangement		32 points/common (common terminal: 17, 18, 36)	
Number of occupied I/O points		32 points (I/O assignment is set as a 32-point output module.)	
Protection function		Yes (overheat protection function, overload protection function) • Overheat protection function is activated in increments of 2 points. • Overload protection function is activated in increments of 1 point.	
Operation indicator		ON indication (LED)	
External connections		37-pin D-sub connector	
Applicable wire size		0.088 to 0.3mm^2 (For A6CON1E) ＊1	
Applicable connector		A6CON1E, A6CON2E, A6CON3E (optional)	
Applicable connector/terminal block converter module		A6TBY36-E, A6TBY54-E	
Internal current consumption (5VDC)		95mA (TYP. all points ON) (0.10A is shown on the rating plate of the module.)	
Weight		0.15kg	

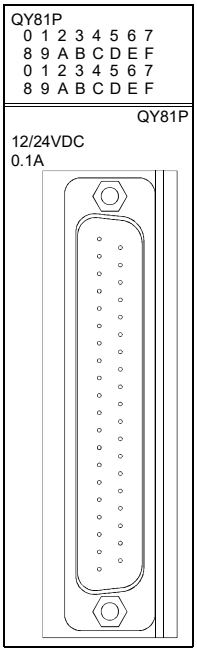

External connection

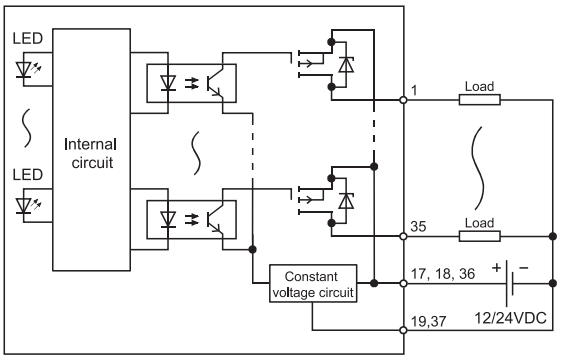

Pin-Outs

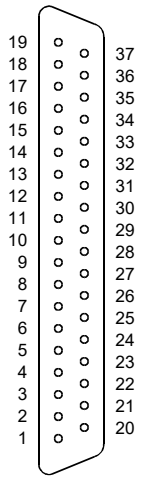

Module front view

Pin No.	Signal No.	Pin No.	Signal No.
1	Y00	9	Y10
20	Y01	28	Y11
2	Y02	10	Y12
21	Y03	29	Y13
3	Y04	11	Y14
22	Y05	30	Y15
4	Y06	12	Y16
23	Y07	31	Y17
5	Y08	13	Y18
24	Y09	32	Y19
6	Y0A	14	Y1A
25	Y0B	33	Y1B
7	Y0C	15	Y1C
26	Y0D	34	Y1D
8	Y0E	16	Y1E
27	Y0F	35	Y1F
17	COM	37	0V
36	COM	19	0V
18	COM		

＊1: When using A6CON2E or A6CON3E, refer to Chapter 7.

3.17 QY82P Transistor Output Module (Source Type)

Specifications \ Type		Transistor Output Module (Source Type)	
		QY82P	Appearance
Number of output points		64 points	
Isolation method		Photocoupler	
Rated load voltage		12-24VDC (+20/-15%)	
Maximum load current		0.1A/1point, Pilot Duty, 2A/common	
Maximum inrush current		0.7A, 10ms or less	
Leakage current at OFF		0.1mA or less	
Maximum voltage drop at ON		0.1VDC (TYP.) 0.1A, 0.2VDC (MAX.) 0.1A	
Response time	OFF to ON	1ms or less	
	ON to OFF	1ms or less (rated load, resistive load)	
Surge suppressor		Zener diode	
Fuse		No	
External supply power	Voltage	12-24VDC (+20/-15%) (ripple ratio within 5%)	
	Current	40mA (at 24VDC)/common	
Dielectric withstand voltage		560VAC rms/3 cycles (altitude 2000m)	
Insulation resistance		10MΩ or more by insulation resistance tester	
Noise immunity		By noise simulator of 500Vp-p noise voltage, 1 μs noise width and 25 to 60Hz noise frequency	
		First transient noise IEC61000-4-4: 1kV	
Protection degree		IP2X	
Common terminal arrangement		32 points/common (common terminal: 1B01, 1B02, 2B01, 2B02)	
Number of occupied I/O points		64 points (I/O assignment is set as a 64-point output module.)	
Protection function		Yes (overheat protection function, overload protection function) • Overheat protection function is activated in increments of 2 points. • Overload protection function is activated in increments of 1 point.	
Operation indicator		ON indication (LED), 32 point switch-over using switch	
External connections		40-pin connector	
Applicable wire size		0.088 to 0.3mm^2 (For A6CON1 or A6CON4) ＊3	
Applicable connector		A6CON1, A6CON2, A6CON3, A6CON4 (optional)	
Applicable connector/terminal block converter module		A6TBXY36, A6TBXY54	
Internal current consumption (5VDC)		160mA (TYP. all points ON)	
Weight		0.17kg	

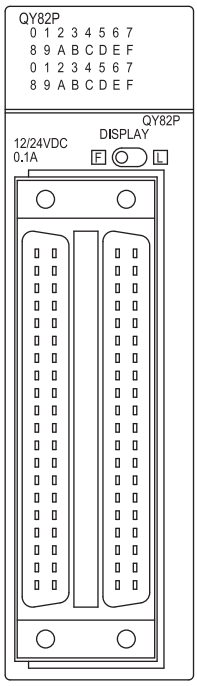

External connection

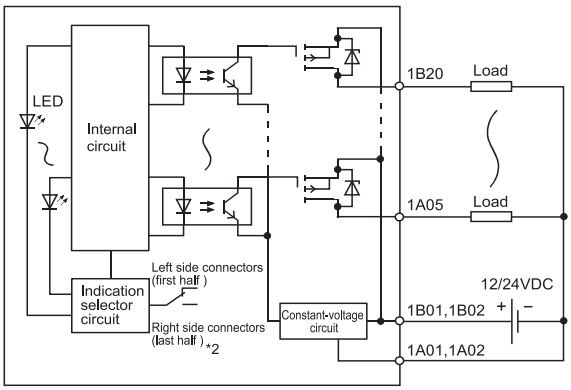

The above diagram shows the first half of 32 points (F).
The latter half of 32 points (L) are similar.

Pin-Outs

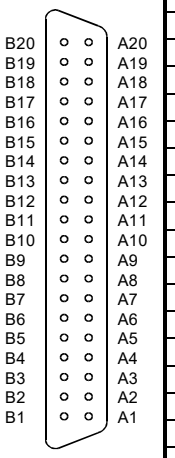

Module front view

Pin No. ＊1	Signal No.	Pin No. ＊1	Signal No.	Pin No. ＊1	Signal No.	Pin No. ＊1	Signal No.
1B20	Y00	1A20	Y10	2B20	Y20	2A20	Y30
1B19	Y01	1A19	Y11	2B19	Y21	2A19	Y31
1B18	Y02	1A18	Y12	2B18	Y22	2A18	Y32
1B17	Y03	1A17	Y13	2B17	Y23	2A17	Y33
1B16	Y04	1A16	Y14	2B16	Y24	2A16	Y34
1B15	Y05	1A15	Y15	2B15	Y25	2A15	Y35
1B14	Y06	1A14	Y16	2B14	Y26	2A14	Y36
1B13	Y07	1A13	Y17	2B13	Y27	2A13	Y37
1B12	Y08	1A12	Y18	2B12	Y28	2A12	Y38
1B11	Y09	1A11	Y19	2B11	Y29	2A11	Y39
1B10	Y0A	1A10	Y1A	2B10	Y2A	2A10	Y3A
1B09	Y0B	1A09	Y1B	2B09	Y2B	2A09	Y3B
1B08	Y0C	1A08	Y1C	2B08	Y2C	2A08	Y3C
1B07	Y0D	1A07	Y1D	2B07	Y2D	2A07	Y3D
1B06	Y0E	1A06	Y1E	2B06	Y2E	2A06	Y3E
1B05	Y0F	1A05	Y1F	2B05	Y2F	2A05	Y3F
1B04	Vacant	1A04	Vacant	2B04	Vacant	2A04	Vacant
1B03	Vacant	1A03	Vacant	2B03	Vacant	2A03	Vacant
1B02	COM1	1A02	0V	2B02	COM2	2A02	0V
1B01	COM1	1A01	0V	2B01	COM2	2A01	0V

＊1: Pin number of 1 □□□ indicates that of the left-hand side connector, and pin number of 2 □□□ indicates that of the right-hand side connector.
＊2: Selection of left-hand (F) side provides the first half (Y00 to Y1F) LED indications, and selection of right-hand (L) side provides the latter half (Y20 to Y3F) LED indications.
＊3: When using A6CON2 or A6CON3, refer to Chapter 7.

4. I/O COMBINED MODULE

4.1 QH42P I/O Combined Module

- When using the module, configure the system according to Section 1.2.3 (2).
- The module uses same I/O numbers for input and output.
  For I/O numbers of I/O combined modules, refer to Section 1.2.3.

(1) DC input specifications (positive common type)

Specifications \ Type		QH42P I/O combined module (input specifications)
Number of input points		32 points
Isolation method		Photocoupler
Rated input voltage		24VDC (+20/-15%, ripple ratio within 5%)
Rated input current		Approx. 4mA
Input derating		See the derating chart.
ON voltage/ON current		19V or higher/3mA or higher
OFF voltage/OFF current		11V or lower/1.7mA or lower
Input resistance		Approx. 5.6kΩ
Response time	OFF→ON	1ms/5ms/10ms/20ms/70ms or less (configured in PLC parameter) ＊1 (Default: 10ms)
	ON→OFF	1ms/5ms/10ms/20ms/70ms or less (configured in PLC parameter) ＊1 (Default: 10ms)
Dielectric withstand voltage		560VAC rms/3 cycles (altitude 2000m)
Insulation resistance		10MΩ or more by insulation resistance tester
Noise immunity		By noise simulator of 500Vp-p noise voltage, 1μs noise width and 25 to 60Hz noise frequency
		First transient noise IEC61000-4-4: 1kV
Protection degree		IP2X
Common terminal arrangement		32 points/common (common terminal: 1B01, 1B02)
Number of occupied I/O points		32 points (I/O assignment is set as a 32-point I/O combined module.)
Operation indicator		ON indication (LED), 32-point switchover using switch ＊2
External connections		40-pin connector
Applicable wire size		0.088 to 0.3mm^2 (For A6CON1 or A6CON4) ＊3
Applicable connector		A6CON1, A6CON2, A6CON3, A6CON4 (optional)
Applicable connector/terminal block converter module		A6TBXY36, A6TBXY54, A6TBX70
Internal current consumption (5VDC)		130mA (TYP, all points ON)
Weight		0.20kg

＊1: For the setting method, refer to the Section 1.3.1.
＊2: Selection of left-hand (F) side provides the first half (X00 to X1F) LED indications, and selection of right-hand (L) side provides the latter half (Y00 to Y1F) LED indications.
＊3: When using A6CON2 or A6CON3, refer to Chapter 7.

External connection	Derating chart
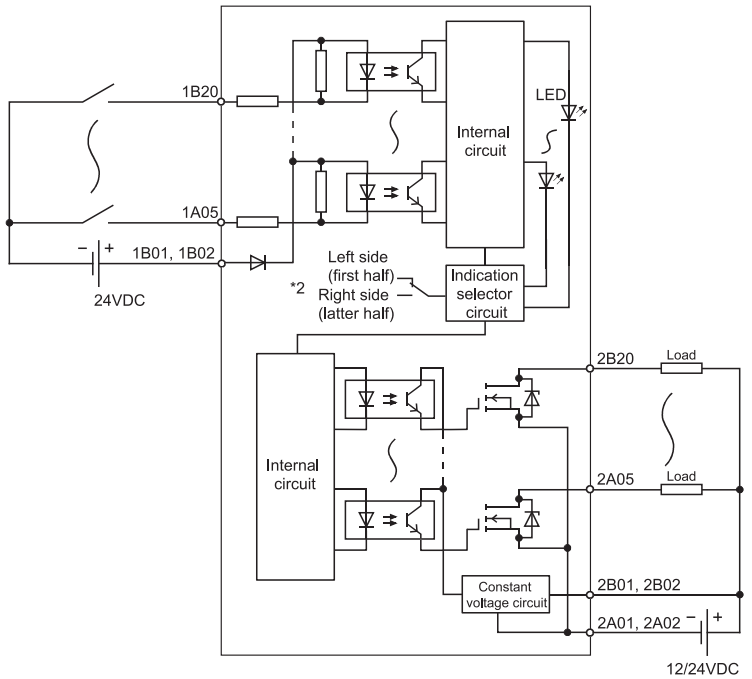	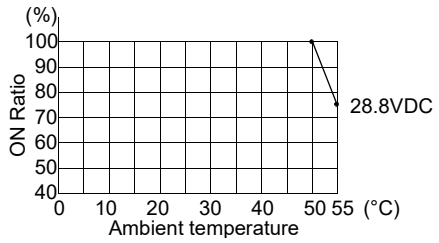

＊2: Selection of left-hand (F) side provides the first half (X00 to X1F) LED indications, and selection of right-hand (L) side provides the latter half (Y00 to Y1F) LED indications.

(2) Transistor output specifications (sink type)

Specifications \ Type		QH42P I/O combined module (output specifications)	Appearance
Number of output points		32 points	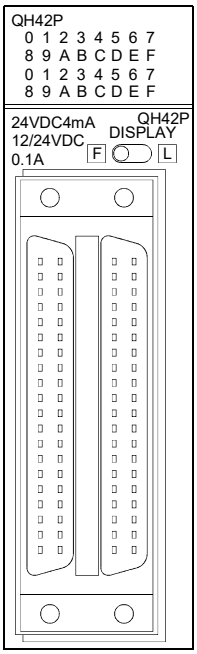
Isolation method		Photocoupler	
Rated load voltage		12-24VDC (+20/-15%)	
Maximum load current		0.1A/point, 2A/common	
Maximum inrush current		0.7A/10ms or less	
Leakage current at OFF		0.1mA or lower	
Maximum voltage drop at ON		0.1VDC (TYP.) 0.1A, 0.2VDC (MAX.) 0.1A	
Response time	OFF→ON	1ms or shorter	
	ON→OFF	1ms or shorter (rated load, resistance load)	
Surge suppressor		Zener diode	
Fuse		None	
External power supply	Voltage	12-24VDC (+20/-15%) (ripple ratio within 5%)	
	Current	MAX. 15mA /common (when 24VDC and all points are ON)	
Common terminal arrangement		32 points/common (common terminal: 2A01, 2A02)	
Protection function		Provided (overheat protection function, overload protection function) • Overheat protection function operate independently of each other. • Overload protection function operate independently of each other.	

Pin-Outs	Pin No. ＊4	Signal No.	Pin No. ＊4	Signal No.	Pin No. ＊4	Signal No.	Pin No. ＊4	Signal No.
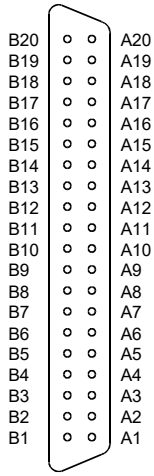	1B20	X00	1A20	X10	2B20	Y00	2A20	Y10
	1B19	X01	1A19	X11	2B19	Y01	2A19	Y11
	1B18	X02	1A18	X12	2B18	Y02	2A18	Y12
	1B17	X03	1A17	X13	2B17	Y03	2A17	Y13
	1B16	X04	1A16	X14	2B16	Y04	2A16	Y14
	1B15	X05	1A15	X15	2B15	Y05	2A15	Y15
	1B14	X06	1A14	X16	2B14	Y06	2A14	Y16
	1B13	X07	1A13	X17	2B13	Y07	2A13	Y17
	1B12	X08	1A12	X18	2B12	Y08	2A12	Y18
	1B11	X09	1A11	X19	2B11	Y09	2A11	Y19
	1B10	X0A	1A10	X1A	2B10	Y0A	2A10	Y1A
	1B09	X0B	1A09	X1B	2B09	Y0B	2A09	Y1B
	1B08	X0C	1A08	X1C	2B08	Y0C	2A08	Y1C
	1B07	X0D	1A07	X1D	2B07	Y0D	2A07	Y1D
	1B06	X0E	1A06	X1E	2B06	Y0E	2A06	Y1E
	1B05	X0F	1A05	X1F	2B05	Y0F	2A05	Y1F
	1B04	Vacant	1A04	Vacant	2B04	Vacant	2A04	Vacant
	1B03	Vacant	1A03	Vacant	2B03	Vacant	2A03	Vacant
Module front view	1B02	COM1	1A02	Vacant	2B02	12/24 VDC	2A02	COM2
	1B01	COM1	1A01	Vacant	2B01	12/24 VDC	2A01	COM2

＊4: Pin number of 1 □□□ indicates that of the left-hand side connector, and pin number of 2 □□□ indicates that of the right-hand side connector.

4.2 QX41Y41P I/O Combined Module

- When using the module, configure the system according to Section 1.2.3 (2).
- The module uses sequential I/O numbers for input and output.
  For I/O numbers of I/O combined modules, refer to Section 1.2.3.

(1) DC input specifications (positive common type)

Specifications \ Type		QX41Y41P I/O combined module (input specifications)
Number of input points		32 points
Isolation method		Photocoupler
Rated input voltage		20.4 to 28.8VDC (ripple ratio within 5%)
Rated input current		Approx. 4mA
Input derating		See the derating chart.
ON voltage/ON current		19V or higher/3mA or higher
OFF voltage/OFF current		11V or lower/1.7mA or lower
Input resistance		Approx. 5.6kΩ
Response time	OFF→ON	1ms/5ms/10ms/20ms/70ms or less (configured in PLC parameter) ＊1 (Default: 10ms)
	ON→OFF	1ms/5ms/10ms/20ms/70ms or less (configured in PLC parameter) ＊1 (Default: 10ms)
Dielectric withstand voltage		560VAC rms/3 cycles (altitude 2000m)
Insulation resistance		10MΩ or more by insulation resistance tester
Noise immunity		By noise simulator of 500Vp-p noise voltage, 1μs noise width and 25 to 60Hz noise frequency
		First transient noise IEC61000-4-4: 1kV
Protection degree		IP2X
Common terminal arrangement		32 points/common (common terminal: 1B01, 1B02)
Number of occupied I/O points		64 points (I/O assignment is set as a 64-point I/O combined module.)
Operation indicator		ON indication (LED), 32-point switchover using switch ＊2
External connections		40-pin connector
Applicable wire size		0.088 to 0.3mm^2 (For A6CON1 or A6CON4) ＊3
Applicable connector		A6CON1, A6CON2, A6CON3, A6CON4 (optional)
Applicable connector/terminal block converter module		A6TBXY36, A6TBXY54, A6TBX70
Internal current consumption (5VDC)		130mA (TYP, all points ON)
Weight		0.20kg

＊1: For the setting method, refer to the Section 1.3.1.
＊2: Selection of left-hand (F) side provides the first half (X00 to X1F) LED indications, and selection of right-hand (L) side provides the latter half (Y20 to Y3F) LED indications.
＊3: When using A6CON2 or A6CON3, refer to Chapter 7.

External connection	Derating chart
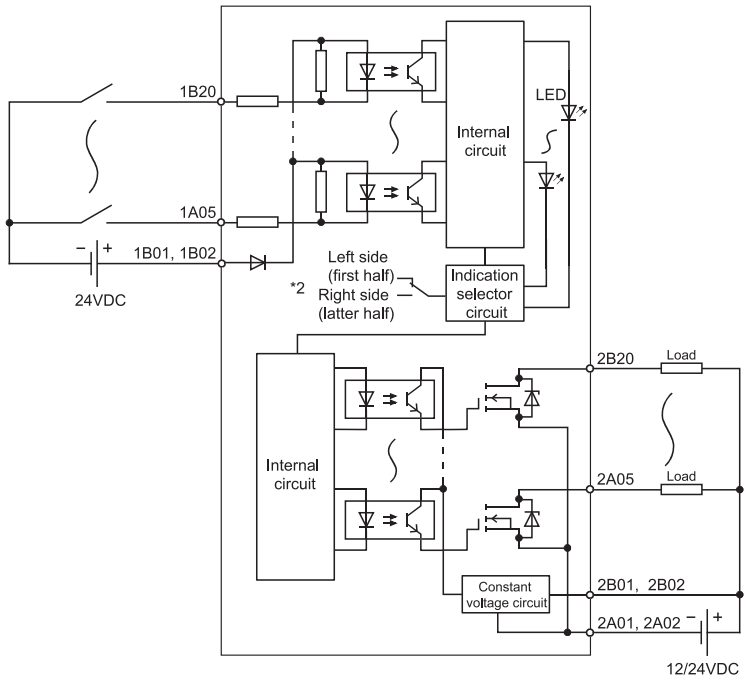	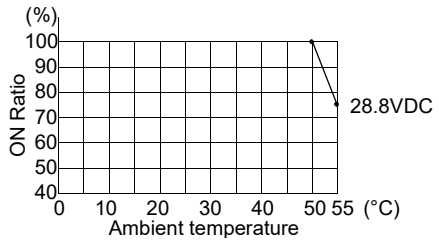

＊2: Selection of left-hand (F) side provides the first half (X00 to X1F) LED indications, and selection of right-hand (L) side provides the latter half (Y20 to Y3F) LED indications.

(2) Transistor output specifications (sink type)

Specifications \ Type		QX41Y41P I/O combined module (output specifications)	Appearance
Number of output points		32 points	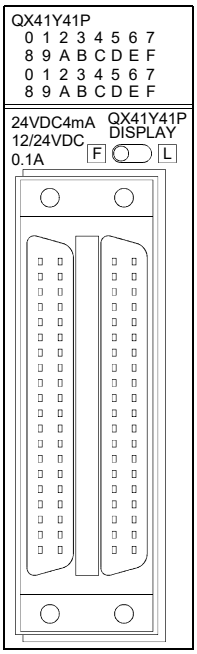
Isolation method		Photocoupler	
Rated load voltage		12-24VDC (+20/-15%)	
Maximum load current		0.1A/point, 2A/common	
Maximum inrush current		0.7A/10ms or less	
Leakage current at OFF		0.1mA or lower	
Maximum voltage drop at ON		0.1VDC (TYP.) 0.1A, 0.2VDC (MAX.) 0.1A	
Response time	OFF→ON	1ms or shorter	
	ON→OFF	1ms or shorter (rated load, resistance load)	
Surge suppressor		Zener diode	
Fuse		None	
External power supply	Voltage	12-24VDC (+20/-15%) (ripple ratio within 5%)	
	Current	MAX. 15mA /common (when 24VDC and all points are ON)	
Common terminal arrangement		32 points/common (common terminal: 2A01, 2A02)	
Protection function		Provided (overheat protection function, overload protection function) • Overheat protection function operate independently of each other. • Overload protection function operate independently of each other.	

Pin-Outs	Pin No. ＊4	Signal No.	Pin No. ＊4	Signal No.	Pin No. ＊4	Signal No.	Pin No. ＊4	Signal No.
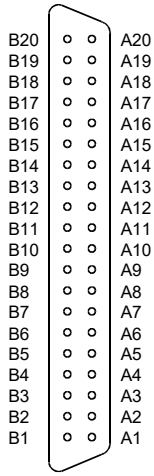	1B20	X00	1A20	X10	2B20	Y20	2A20	Y30
	1B19	X01	1A19	X11	2B19	Y21	2A19	Y31
	1B18	X02	1A18	X12	2B18	Y22	2A18	Y32
	1B17	X03	1A17	X13	2B17	Y23	2A17	Y33
	1B16	X04	1A16	X14	2B16	Y24	2A16	Y34
	1B15	X05	1A15	X15	2B15	Y25	2A15	Y35
	1B14	X06	1A14	X16	2B14	Y26	2A14	Y36
	1B13	X07	1A13	X17	2B13	Y27	2A13	Y37
	1B12	X08	1A12	X18	2B12	Y28	2A12	Y38
	1B11	X09	1A11	X19	2B11	Y29	2A11	Y39
	1B10	X0A	1A10	X1A	2B10	Y2A	2A10	Y3A
	1B09	X0B	1A09	X1B	2B09	Y2B	2A09	Y3B
	1B08	X0C	1A08	X1C	2B08	Y2C	2A08	Y3C
	1B07	X0D	1A07	X1D	2B07	Y2D	2A07	Y3D
	1B06	X0E	1A06	X1E	2B06	Y2E	2A06	Y3E
	1B05	X0F	1A05	X1F	2B05	Y2F	2A05	Y3F
	1B04	Vacant	1A04	Vacant	2B04	Vacant	2A04	Vacant
	1B03	Vacant	1A03	Vacant	2B03	Vacant	2A03	Vacant
Module front view	1B02	COM1	1A02	Vacant	2B02	12/24 VDC	2A02	COM2
	1B01	COM1	1A01	Vacant	2B01	12/24 VDC	2A01	COM2

＊4: Pin number of 1 □□□ indicates that of the left-hand side connector, and pin number of 2 □□□ indicates that of the right-hand side connector.

4.3 QX48Y57 I/O Combined Module

- When using the module, configure the system according to Section 1.2.3 (2).
- The module uses sequential I/O numbers for input and output.
  For I/O numbers of I/O combined modules, refer to Section 1.2.3.

(1) DC input specifications (positive common type)

Specifications \ Type		QX48Y57 I/O combined module (input specifications)	Appearance
Number of input points		8 points	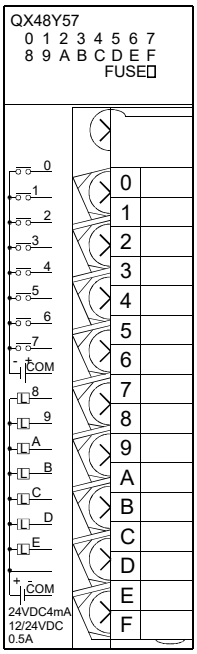
Isolation method		Photocoupler	
Rated input voltage		24VDC (+20/-15%, ripple ratio within 5%)	
Rated input current		Approx. 4mA	
Input derating		None	
ON voltage/ON current		19V or higher/3mA or higher	
OFF voltage/OFF current		11V or lower/1.7mA or lower	
Input resistance		Approx. 5.6kΩ	
Response time	OFF→ON	1ms/5ms/10ms/20ms/70ms or less (configured in PLC parameter) ＊1 (Default: 10ms)	
	ON→OFF	1ms/5ms/10ms/20ms/70ms or less (configured in PLC parameter) ＊1 (Default: 10ms)	
Dielectric withstand voltage		560VAC rms/3 cycles (altitude 2000m)	
Insulation resistance		10MΩ or more by insulation resistance tester	
Noise immunity		By noise simulator of 500Vp-p noise voltage, 1μs noise width and 25 to 60Hz noise frequency	
		First transient noise IEC61000-4-4: 1kV	
Protection degree		IP2X	
Common terminal arrangement		8 points/common (common terminal: TB9)	
Number of occupied I/O points		16 points (I/O assignment is set as a 16-point I/O combined module.)	
Operation indicator		ON indication (LED)	
External connections		18-point terminal block (M3×6 screw)	
Applicable wire size		Core cable: 0.3 to 0.75mm^2 (Outside diameter: 2.8mm or smaller)	
Applicable crimping terminal		R1.25-3 (Sleeved crimping terminals cannot be used.)	
Internal current consumption (5VDC)		80mA (TYP, all points ON)	
Weight		0.20kg	

＊1: For the setting method, refer to the Section 1.3.1.

External connection

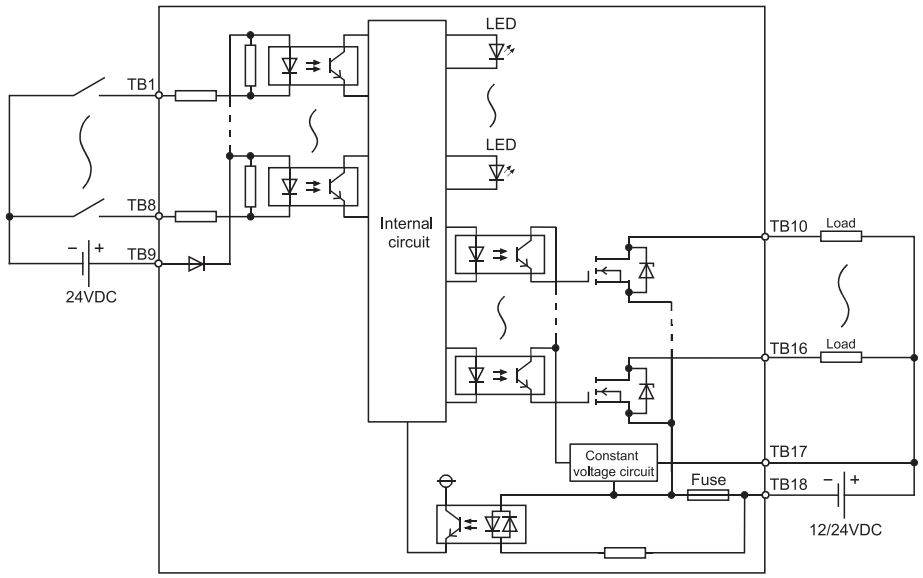

Terminal block No.	Signal name
TB1	X00
TB2	X01
TB3	X02
TB4	X03
TB5	X04
TB6	X05
TB7	X06
TB8	X07
TB9	COM1
TB10	Y08
TB11	Y09
TB12	Y0A
TB13	Y0B
TB14	Y0C
TB15	Y0D
TB16	Y0E
TB17	12/24VDC
TB18	COM2

(2) Transistor output specifications (sink type)

Specifications \ Type		QX48Y57 I/O combined module (output specifications)
Number of output points		7 points
Isolation method		Photocoupler
Rated load voltage		12-24VDC (+20/-15%)
Maximum load current		0.5A/point, 2A/common
Maximum inrush current		4A/10ms or less
Leakage current at OFF		0.1mA or lower
Maximum voltage drop at ON		0.2VDC (TYP.) 0.5A, 0.3VDC (MAX.) 0.5A
Response time	OFF→ON	1ms or shorter
	ON→OFF	1ms or shorter (rated load, resistance load)
Surge suppressor		Zener diode
Fuse		4A (Not replaceable) (Fuse capacity: 50A)
Fuse blown indicator		Provided (When a fuse blows, LED turns on and a signal is output to the CPU module) ＊2
External power supply	Voltage	12-24VDC (+20/-15%) (ripple ratio within 5%)
	Current	10mA (at 24VDC)
Common terminal arrangement		7 points/common (common terminal: TB18)

＊2: Fuse blown is not detected when the external power supply is shut off.

5. INTERRUPT MODULE

5.1 QI60 Interrupt Module

For usage of this module, refer to the User's Manual (Function Explanation, Program Fundamentals) for the CPU module used.

Specifications \ Type			Interrupt module				
			QI60				Appearance
Number of input points			16 points				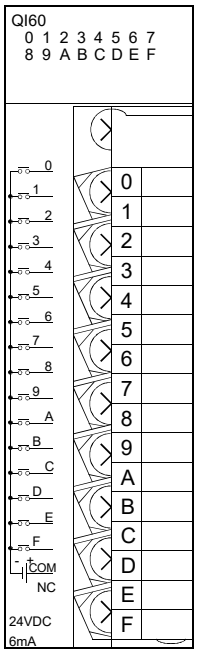
Isolation method			Photocoupler				
Rated input voltage			24VDC (+20/-15%, ripple ratio within 5%)				
Rated input current			Approx. 6mA				
Input derating			No				
ON voltage/ON current			19V or higher/4.0mA or higher				
OFF voltage/OFF current			11V or lower/1.7mA or lower				
Input impedance			Approx. 3.9kΩ				
Response time	Set value ＊1		0.1	0.2	0.4	0.6	1
	OFF to ON	TYP.	0.05ms	0.15ms	0.30ms	0.55ms	1.05ms
		MAX.	0.10ms	0.20ms	0.40ms	0.60ms	1.20ms
	ON to OFF	TYP.	0.15ms	0.20ms	0.35ms	0.60ms	1.10ms
		MAX.	0.20ms	0.30ms	0.50ms	0.70ms	1.30ms
Dielectric withstand voltage			560VAC rms/3 cycles (altitude 2000m)				
Insulation resistance			10MΩ or more by insulation resistance tester				
Noise immunity			By noise simulator of 500Vp-p noise voltage, 1μs noise width and 25 to 60Hz noise frequency				
			First transient noise IEC61000-4-4: 1kV				
Protection degree			IP2X				
Common terminal arrangement			16 points/common (common terminal: TB17)				
Number of occupied I/O points			16 points (I/O assignment is set as a 16-point interrupt module.) ＊3				
Interrupt processing condition			Set by Switch setting in GX Developer. ＊2				
Operation indicator			ON indication (LED)				
External connections			18-point terminal block (M3×6 screws)				
Applicable wire size			0.3 to 0.75mm^2 core (2.8mm OD max.)				
Applicable crimping terminal			R1.25-3 (Sleeved crimping terminals cannot be used.)				
Internal current consumption (5VDC)			60mA (TYP. all points ON)				
Weight			0.20kg				

External connection	Terminal block No.	Signal name
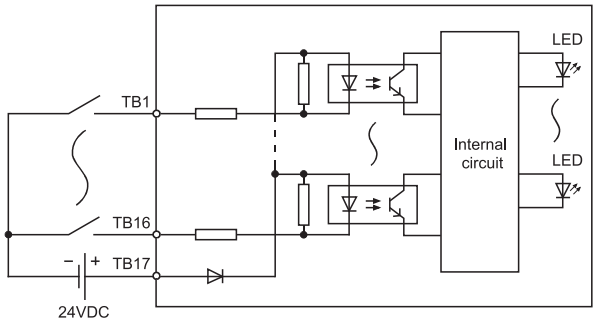	TB1	X00
	TB2	X01
	TB3	X02
	TB4	X03
	TB5	X04
	TB6	X05
	TB7	X06
	TB8	X07
	TB9	X08
	TB10	X09
	TB11	X0A
	TB12	X0B
	TB13	X0C
	TB14	X0D
	TB15	X0E
	TB16	X0F
	TB17	COM
	TB18	Vacant

＊1: Select the value in PLC parameter. (Default: 0.2ms). Refer to Section 1.3.1 for the setting method.
For the CPU modules (Q series) and GX Developer where the response time can be set, refer to Section 1.2.5.
＊2: For the setting method, refer to the section 1.3.3.
＊3: When making settings with an SW5D5C-GPPW or earlier GX Developer, select "16 point intelligent Module."

MEMO

5 - 2

6. BLANK COVER MODULE

This chapter provides the specifications of the blank cover module used to protect the vacant slot (between I/O modules) of the base unit from dust.

Table 6.1 Blank Cover Module Specifications

Item \ Type		QG60
Number of occupied I/O points		Default: 16 points (Can be changed to 0, 16, 32, 48, 64, 128, 256, 512, 1024 points by "PLC system" of "PLC parameter".)
Application		Used as a dustproof cover for a slot not loaded with an I/O module (especially a vacant slot between modules).
External dimensions	H	98mm
	W	27.4mm
	D	90mm
Weight		0.07 kg

＊ Load the blank cover module with the connector cover of the base unit fitted.

MEMO

7. CONNECTORS

The 40-pin connectors and 37-pin D-sub connectors used with the input and output modules are to be user-prepared.
The following tables list the connector types and applicable models, and introduce crimp-contact and pressure-displacement tools.

(1) 40-pin connectors

(a) 40-pin connectors

Type	Model name	Applicable wire size	Applicable model
Soldering type connector (straight out type)	A6CON1*1	0.088 to 0.3mm^2 (28 to 22 AWG) (stranded wire)	QX41, QX41-S1, QX41-S2, QX42, QX42-S1, QX71, QX72, QX82, QY41H, QY41P, QY42P, QY71, QY82P, QH42P, QX41Y41P
Crimp-contact type connector (straight out type)	A6CON2	0.088mm^2 to 0.24mm^2 (28 to 24 AWG) (stranded wire)	
Pressure-displacement type connector (straight out type)	A6CON3	28 AWG (stranded wire) 30 AWG (single wire) Flat cable 1.27mm pitch	
Soldering type connector (both for straight out and 45-degree types)	A6CON4*1	0.088 to 0.3mm^2 (28 to 22 AWG) (stranded wire)	

*1: Use cables with outside diameter of 1.3mm or shorter to connect 40 cables to the connector. In addition, consider the amount of current to be used and select appropriate cables.

(b) 40-pin connector crimp-contact and pressure-displacement tools

Type	Model name	Contact
Crimp-contact tool	N363TT005H	OTAX Corporation
Pressure-displacement tool	N367TT012H (locator plate)	
	N707TT001H (cable cutter)	
	N707TT101H (hand press)	

(2) 37-pin D-sub connectors

(a) 37-pin D-sub connectors

Type	Model name	Applicable wire size	Applicable model
Soldering type connector (straight out type)	A6CON1E*1	0.088 to 0.3mm^2 (28 to 22 AWG) (stranded wire)	QX81, QX81-S2, QY81P
Crimp-contact type connector (straight out type)	A6CON2E	24 to 20 AWG (stranded wire)	
Pressure-displacement type connector (straight out type)	A6CON3E	28 AWG (stranded wire) 30 AWG (single wire)	

*1: Use cables with outside diameter of 1.3mm or shorter to connect 37 cables to the connector. In addition, consider the amount of current to be used and select appropriate cables.

(b) 37-pin D-sub connector crimp-contact and pressure-displacement tools

Type	Model name	Contact
Crimp-contact tool	91503-1	Tyco Electronics AMP K.K.
Pressure-displacement tool	768349-1 (die set) 768338-1	
	91220-1 (cable cutter)	
	91085-2 (hand mini-press)	

8. SPECIFICATIONS OF CONNECTOR/TERMINAL BLOCK CONVERTER MODULES

8.1 Specifications of Connector/Terminal Block Converter Modules

This chapter explains the specifications of connector/terminal block converter modules.

(1) Connector/terminal block converter module

Type	Details	Weight	Applicable wire size	Applicable crimping terminal	Applicable Models
A6TBXY36	For positive common type input modules and sink type output modules (standard type)	0.4kg	0.75 to 2mm^2	1.25-3.5(JIS) 1.25-YS3A V1.25-M3 V1.25-YS3A 2-3.5(JIS) 2-YS3A V2-S3 V2-YS3A	Q series: QX41, QX41-S1, QX41-S2, QX42, QX42-S1, QY41H, QY41P, QY42P, QY82P, QH42P, QX41Y41P AnS series: A1SX41, A1SX41-S1, A1SX41-S2, A1SX42, A1SX42-S1, A1SX42-S2, A1SX82-S1, A1SY41, A1SY41P, A1SY42, A1SY42P, A1SY82, A1SH42, A1SH42P, A1SH42-S1, A1SH42P-S1 A series: AX42, AX42-S1, AY42, AY42-S1, AY42-S3, AY42-S4, AH42 CC-Link: AJ65SBTCF1-32D, AJ65SBTCF1-32T, AJ65BTC1-32D, AJ65BTC1-32T MELSECNET-MINI: AJ35TC1-32D, AJ35TC1-32T
A6TBXY54	For positive common type input modules and sink type output modules (2-wire type)	0.5kg			
A6TBX70	For positive common type input modules (3-wire type)	0.6kg			Q series: QX41, QX41-S1, QX41-S2, QX42, QX42-S1, QH42P, QX41Y41P AnS series: A1SX41, A1SX41-S1, A1SX41-S2, A1SX42, A1SX42-S1, A1SX42-S2, A1SX82-S1, A1SH42, A1SH42P, A1SH42-S1, A1SH42P-S1 A series: AX42, AX42-S1, AH42 CC-Link: AJ65SBTCF1-32D, AJ65BTC1-32D MELSECNET-MINI: AJ35TC1-32D
A6TBX36-E	For negative common type input modules (standard type)	0.4kg			Q series: QX81, QX81-S2 AnS series: A1SX81, A1SX81-S2 A series: AX82
A6TBX54-E	For negative common type input modules (2-wire type)	0.5kg			
A6TBX70-E	For negative common type input modules (3-wire type)	0.6kg			
A6TBY36-E	For source type output modules (standard type)	0.4kg			Q series: QY81P AnS series: A1SY81 A series: AY82EP
A6TBY54-E	For source type output modules (2-wire type)	0.5kg			

POINT

(1) The number of connectable I/O points is 32 for all connector/terminal block converter modules.
Two connector/terminal block converter modules and two cables for connector/terminal block converter modules are required for 64-point I/O modules.
(2) Though the A1SX81(S2) is used either as a sink or source type, use the A6TBX36-E, A6TBX54-E or A6TBX70-E.
The A6TBXY36, A6TBXY54 or A6TBX70 cannot be used.
(3) Though the A1SX82-S1 is used either as a sink or source type, the A6TBXY36/XY54/X70 may be used only when the A1SX82-S1 is used as a sink type.
When it is used as a source type, the A6TBXY36/XY54/X70 cannot be used.
(4) Though the A1SY82 and QY82P are source type output modules, use the A6TBXY36 or A6TBXY54. The A6TBY36-E or A6TBY54-E cannot be used.
(5) In the A series, the positive common input module is separately labeled as a sink type input module, and the negative common input module is separately labeled as a source type input module.
(6) When using the A6TBX70 as I/O combined module, use at the input side.
(7) Tighten the module terminal screws to the following torque.
Terminal screw (M3.5 screw): Tightening torque 0.78N•m

(2) Cable

Type	Details	Weight	Applicable Models
AC05TB	0.5 m, for sink modules	0.17kg	A6TBXY36 A6TBXY54 A6TBX70
AC10TB	1 m, for sink modules	0.23kg	
AC20TB	2 m, for sink modules	0.37kg	
AC30TB	3 m, for sink modules	0.51kg	
AC50TB	5 m, for sink modules	0.76kg	
AC80TB	8 m, for sink modules (common current not exceeding 0.5 A)	1.2kg	
AC100TB	10 m, for sink modules (common current not exceeding 0.5 A)	1.5kg	
AC05TB-E	0.5 m, for source modules	0.17kg	A6TBX36-E A6TBY36-E A6TBX54-E A6TBY54-E A6TBX70-E
AC10TB-E	1 m, for source modules	0.23kg	
AC20TB-E	2 m, for source modules	0.37kg	
AC30TB-E	3 m, for source modules	0.51kg	
AC50TB-E	5 m, for source modules	0.76kg	

8.2 Connector/terminal block converter module connection diagrams

8.2.1 A6TBXY36

(1) When connecting an input module

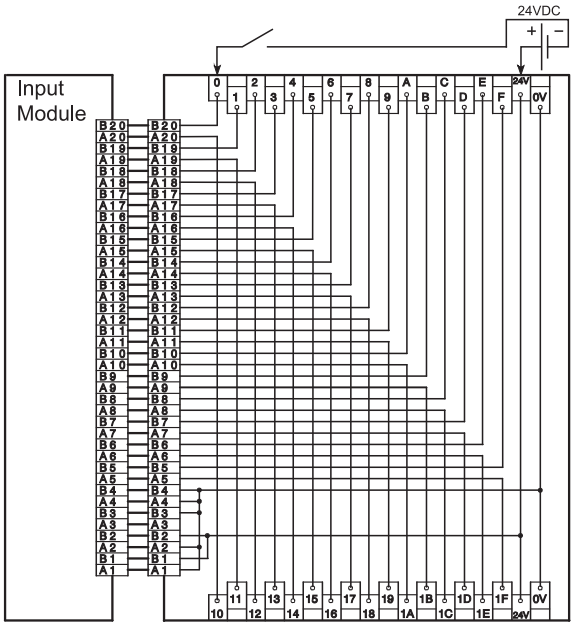

(2) When connecting an output module

(a) Sink type

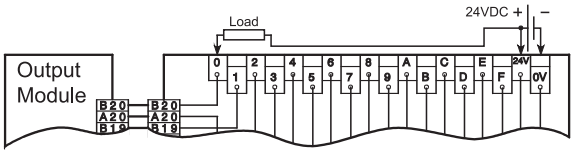

(b) Source type

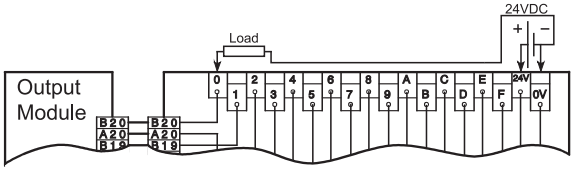

8.2.2 A6TBXY54

(1) When connecting an input module

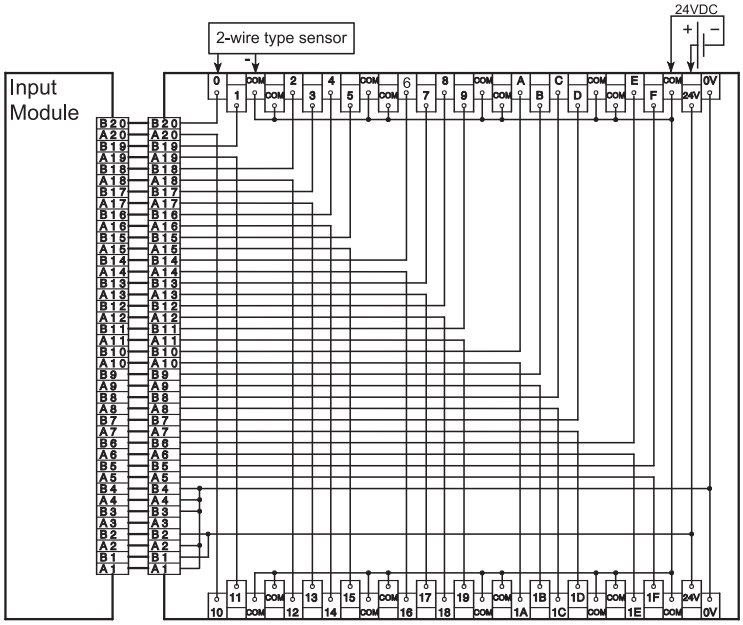

(2) When connecting an output module

(a) Sink type

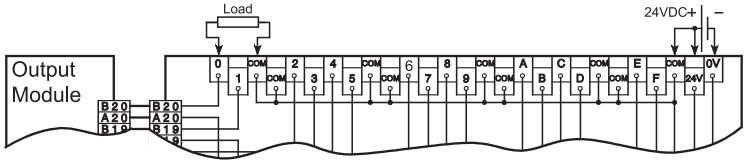

(b) Source type

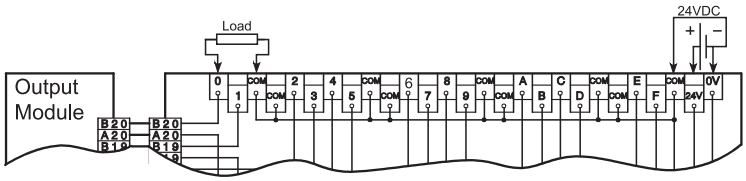

8.2.3 A6TBX70

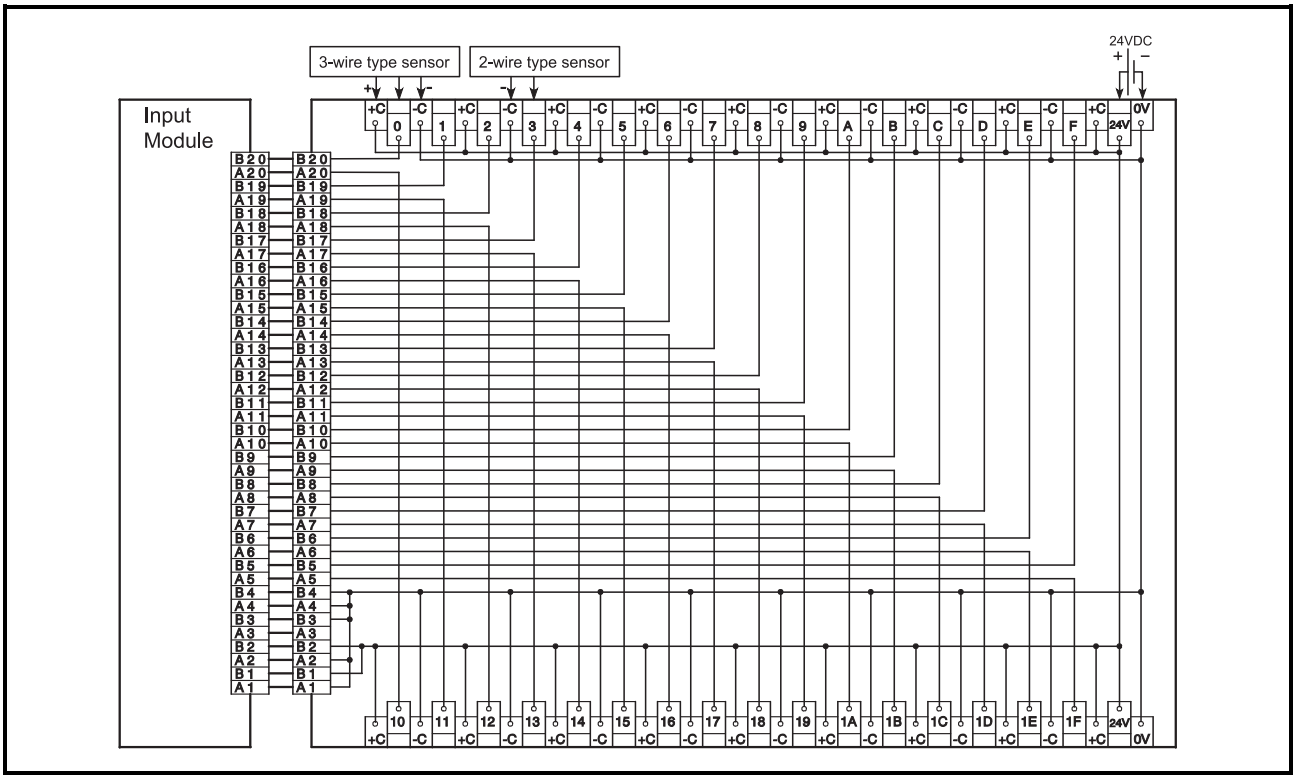

8.2.4 A6TBX36-E

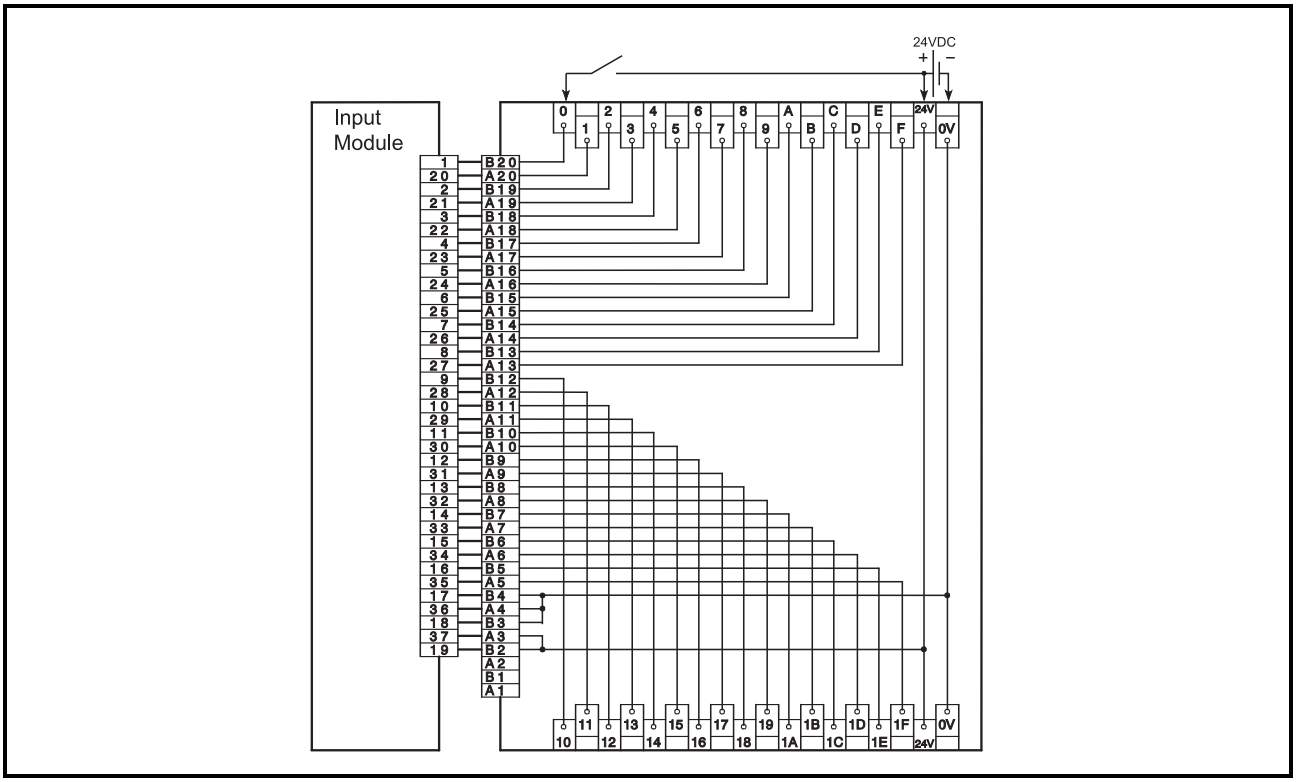

8.2.5 A6TBY36-E

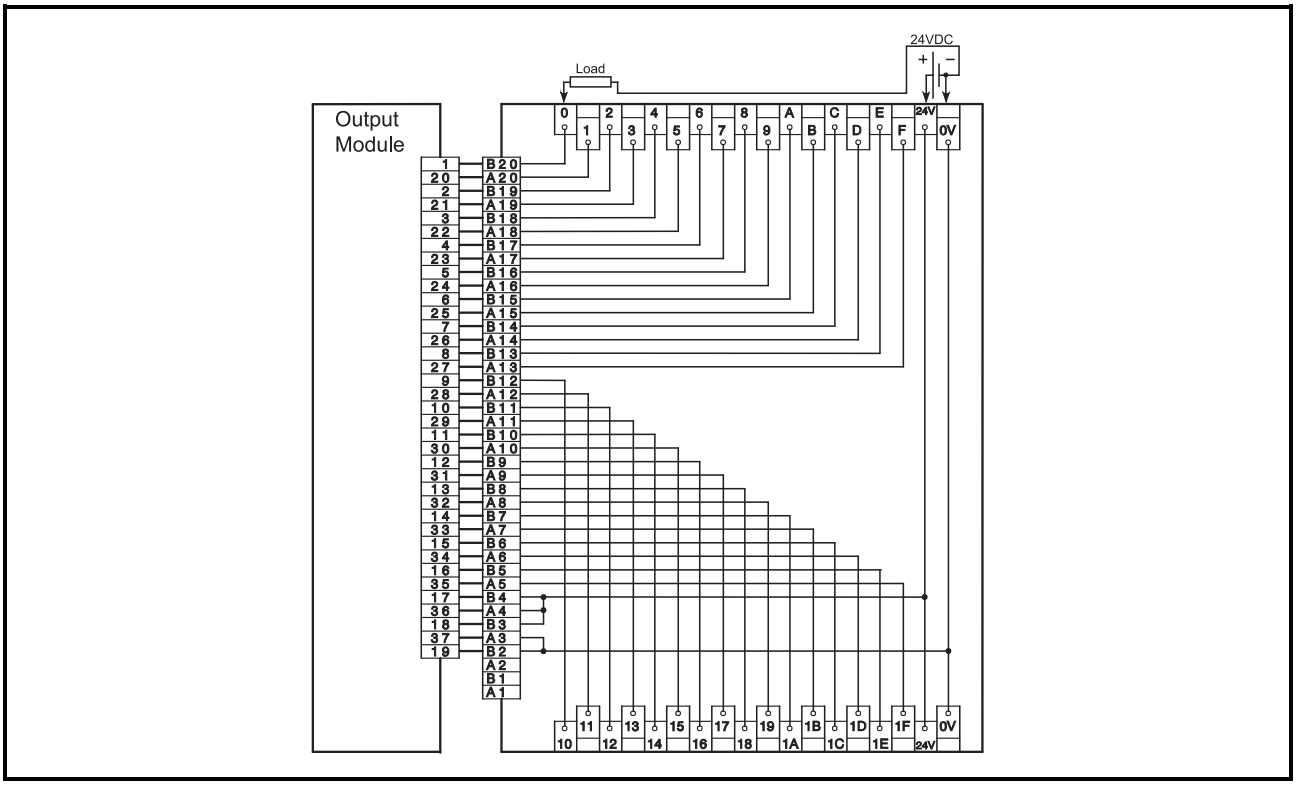

8.2.6 A6TBX54-E

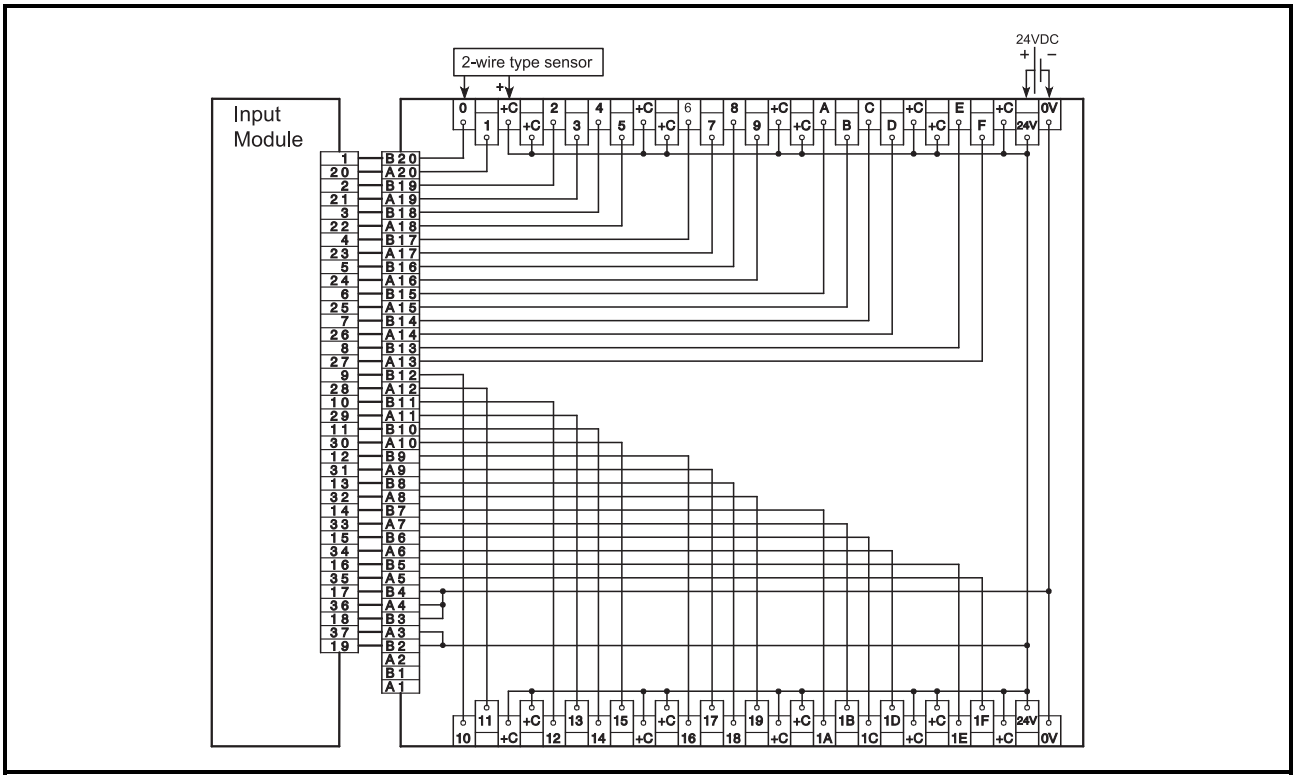

8.2.7 A6TBY54-E

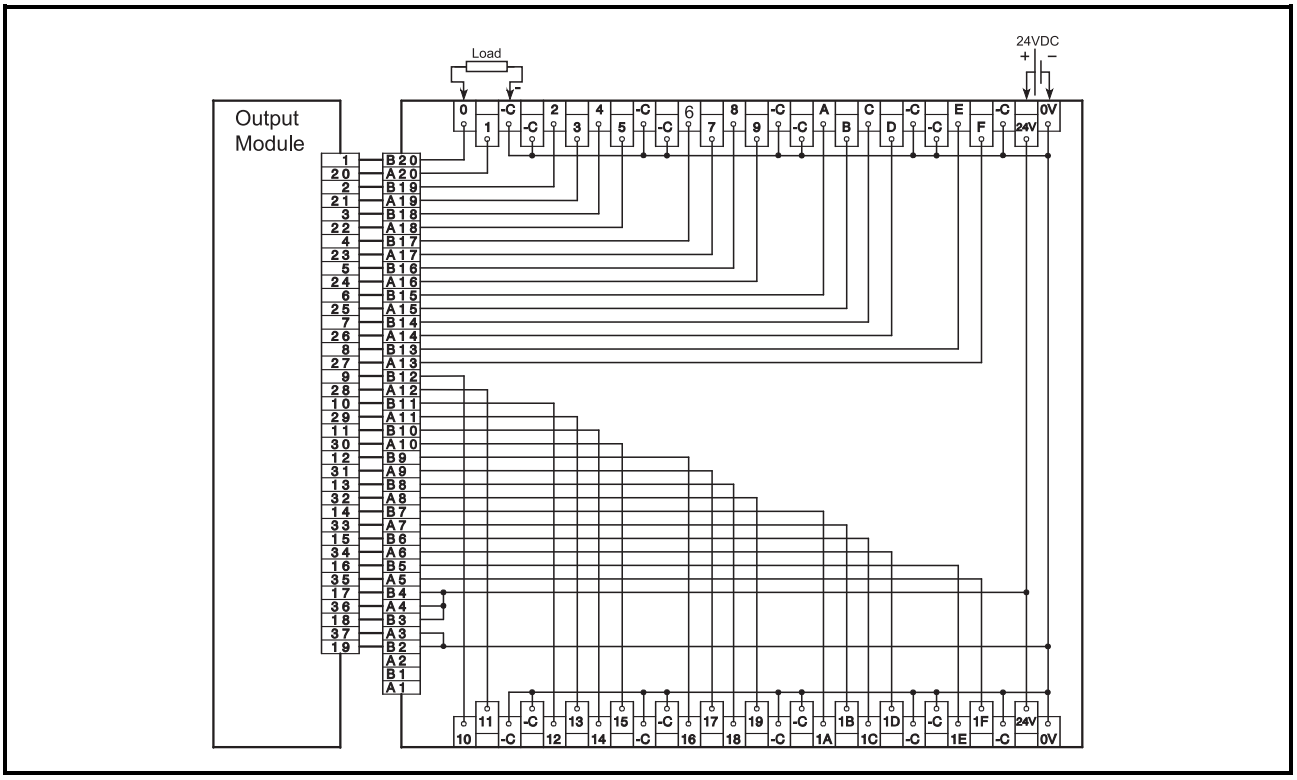

8.2.8 A6TBX70-E

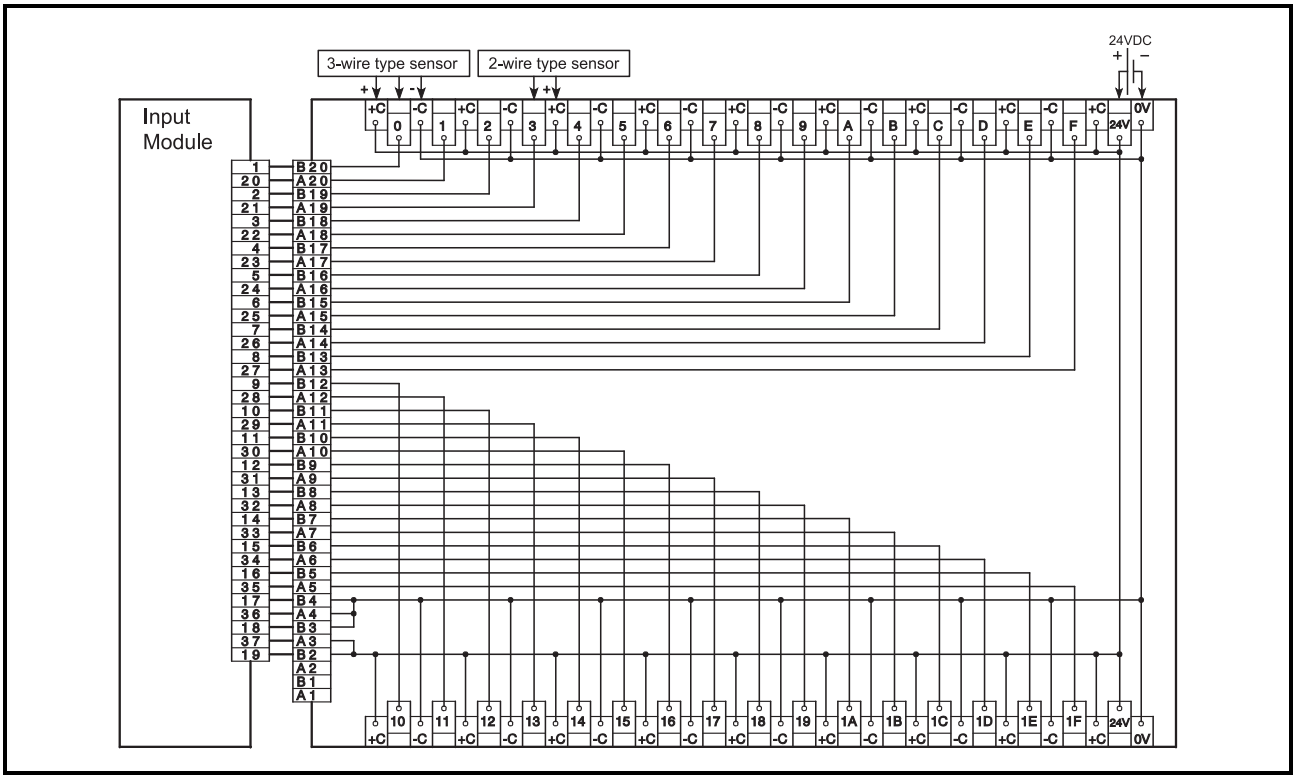

9. SPRING CLAMP TERMINAL BLOCK

This chapter describes a spring clamp terminal block.

9.1 Spring Clamp Terminal Block I/O Module

The spring clamp terminal block I/O module is an I/O module of spring clamp terminal block type.
Since this module uses a spring clamp it does not require screw tightening, which greatly reduces the number of wiring procedures.

(1) Model name

The model name of spring clamp terminal block I/O module is described below.

Model type	Model name		
I/O module	QX10-TS	QX40-TS	QX80-TS
	QY10-TS	QY40P-TS	QY80-TS

POINT

- Use bar solderless terminals for wiring this module.
- For the signal names corresponding to the terminal numbers when connected to an external device, refer to Chapter 2 and 3 in this manual.

(2) Connecting a cable

Strip off about 6.5mm of the cable tip to install the bar solderless terminal to the stripped part.
Connect the cable either by the (a) method or by the (b) method described below.

(a) Connection by inserting the cable

Insert the bar solderless terminal into the circular shaped hole and then force the wire into the hole until the connection check indicator comes out.*1

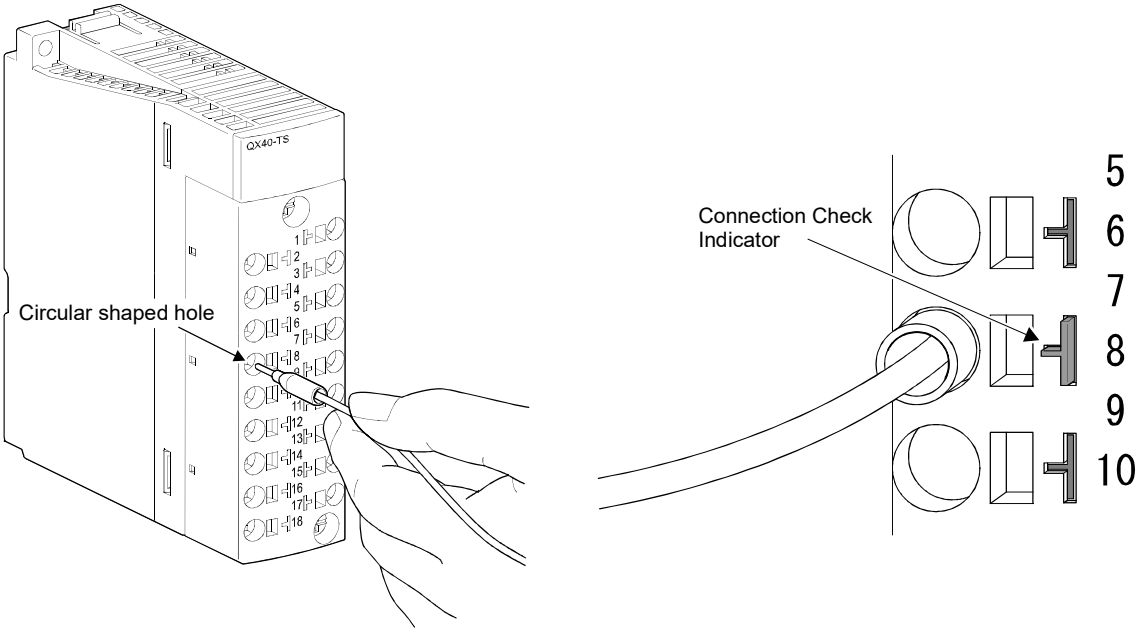

*1: If the connection check indicator does not come out, the bar solderless terminal is not connected to the module properly.
Insert the bar solderless terminal until the connection check indicator comes out.

(b) Use of spring clamp terminal block tool

1) Insert the tool all the way inside the square shaped hole of the terminal block.
2) Insert the bar solderless terminal into the circular shaped hole until the connection check indicator comes out, and remove the tool from the hole.
3) Check that the connection check indicator is sticking out. *1

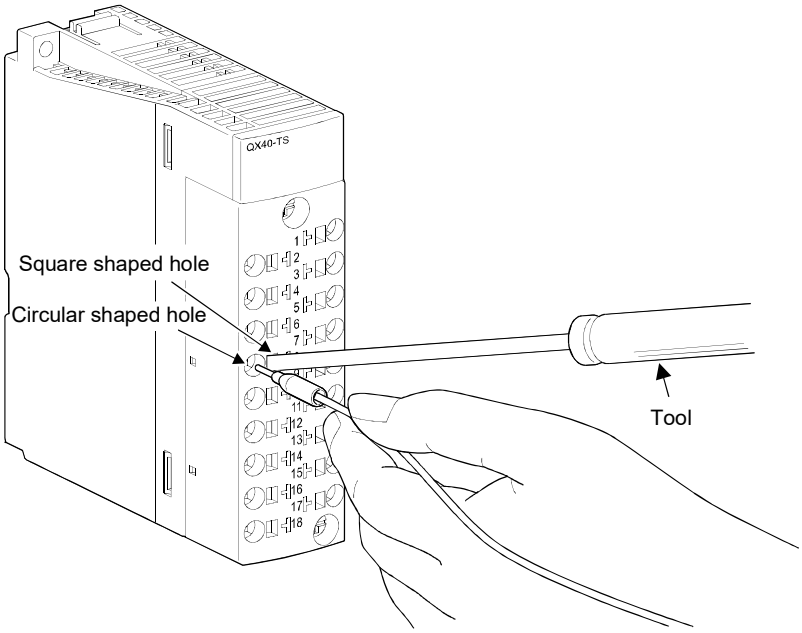

*1: If the connection check indicator does not come out, the bar solderless terminal is not connected to the module properly. Insert the terminal until the connection check indicator comes out.

POINT

- If the stripped wire is inserted into the corresponding hole without installing the bar solderless terminal, the connection check indicator does not come out. Do not use the stripped wire without installing the bar solderless terminal.
- The wire strip length must follow the specification of the bar solderless terminal. Also, use a crimp tool when installing the bar solderless terminal to the wire.
- Before inserting the bar solderless terminal, check the corresponding circular shaped hole and the bar solderless terminal. Before inserting, pay attention to the angle of bar solderless terminal.
  If a bar solderless terminal, which is bigger than the insertion slot, is inserted, the terminal block may be damaged.

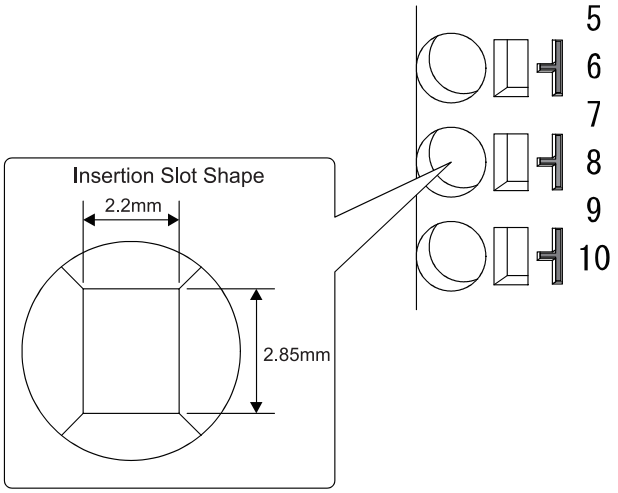

(3) Disconnecting a cable

(a) Insert the tool all the way inside the square shaped hole of the spring clamp terminal block.

(b) Pull the bar solderless terminal out of the hole.

(4) List of introductory products

The tools and the bar solderless terminals used for wiring the spring clamp terminal block I/O module are listed below.

Manufacturer	Name of product	Model name	Applicable wire size
Mitsubishi Electric System & Service Co., Ltd.	Spring clamp terminal block tool	KD-5339	—
Nichifu Co.,Ltd.	Bar solderless terminal	TE 0.5-8 TE 0.5-10	0.3 to 0.5 mm^2 (22 AWG)
		TE 0.75-8 TE 0.75-10	0.75 mm^2 (20 AWG)
		TE 1.0-8 TE 1.0-10	1.0 mm^2 (18 AWG)
		TE 1.5-8 TE 1.5-10	1.5 mm^2 (16 AWG)
	Bar solderless terminal tool	NH79	—
Phoenix Contact Co.,Ltd.	Bar solderless terminal	AI 0.34-8TQ	0.34 mm^2
		AI 0.5-8WH AI 0.5-10WH	0.5 mm^2
		AI 0.75-8GY AI 0.75-10GY	0.75 mm^2
		AI 1-8RD AI 1-10RD	1.0 mm^2
		AI 1.5-8BK AI 1.5-10BK	1.5 mm^2
		AI 2.5-8BU AI 2.5-10BU	2.0 to 2.5 mm^2
	Bar solderless terminal tool	CRIMPFOX ZA 3	—

9.2 Spring Clamp Terminal Block (Q6TE-18S, Q6TE-18SN)

The Q6TE-18S and Q6TE-18SN (hereafter abbreviated as Q6TE-18S(N)) shall be used attached to a Q Series terminal block type I/O module or an intelligent function module.
Since the Q6TE-18S(N) uses a spring clamp it does not require screw tightening, which greatly reduces the number of wiring procedures.

(1) Applicable modules

For the modules that can be used with the Q6TE-18S and Q6TE-18SN, refer to the user's manuals included with the terminal blocks.

(2) Specifications

The Q6TE-18S(N) specification is explained.

Item	Specifications
Applicable wire size	0.3 to 1.5 mm^2 (22 to 16 AWG)
Maximum rated voltage, maximum rated current	264VAC 125VDC 8A (terminal number: 17) 4A (terminal number: 1 to 16, 18)
Wire strip length	8 to 11 mm
Mounting screw tightening torque range	0.66 to 0.89 N•m
Weight	0.07kg

(3) Removing a terminal block

Unscrew the two terminal block mounting screws situated at the top and bottom of the terminal block and take them off.

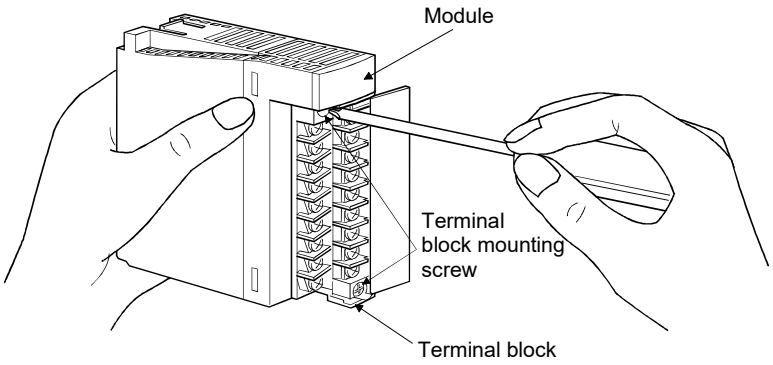

(4) Installing the Q6TE-18S(N)

(a) Remove the protection cap from the Q6TE-18S(N). *1

(b) Mount the Q6TE-18S(N) onto the module and tighten the terminal block mounting screws within the specified torque range.

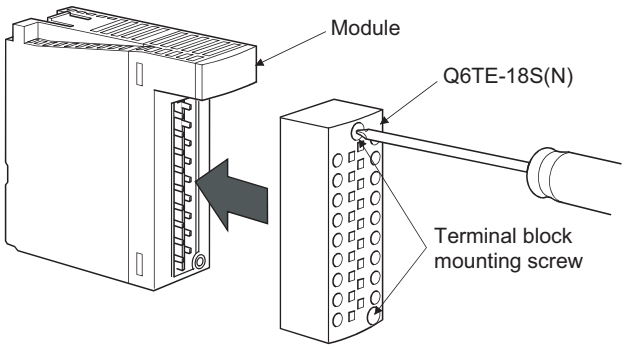

*1: Keep the protection cap after removing it.
When the Q6TE-18S(N) is not used, attach the cap to protect the terminal area.

(5) Precaution for connecting or disconnecting cables

(a) When connecting a wire to the circular shaped hole of the Q6TE-18S(N), insert only one wire to a terminal. Two or more wires cannot be connected to one terminal. Inserting multiple wires may result in a poor contact to the spring clamp terminal part.

(b) Strip the wire according to the specification. If the wire strip length is too long, the exposed conductive part may cause electric shock or short circuit. If the wire strip length is too short, it may result in a poor contact to the spring clamp terminal part.

(c) When using a spring clamp terminal block tool, follow the instruction below. Failure to do so may cause damage of the spring clamp terminal part or the terminal block resin part.

- Use a dedicated tool for a spring clamp terminal block.
- Do not insert the bar solderless terminal or the wire before inserting the tool into the square shaped hole.
- Insert the tool vertically into the hole.

(6) Connecting a cable

(a) When using the bar solderless terminal, correctly connect a wire to the solderless terminal according to the directions for the solderless terminal. When using a wire (single wire or stranded wire), strip the wire to meet the strip length of the specifications.

(b) Insert the tool vertically all the way inside the square shaped hole of the Q6TE-18S(N).

(c) Insert the bar solderless terminal or the wire into the circular shaped hole, and remove the tool from the hole.

(d) After the connection is completed, check that the bar solderless terminal or the wire is firmly clamped by pulling it lightly.

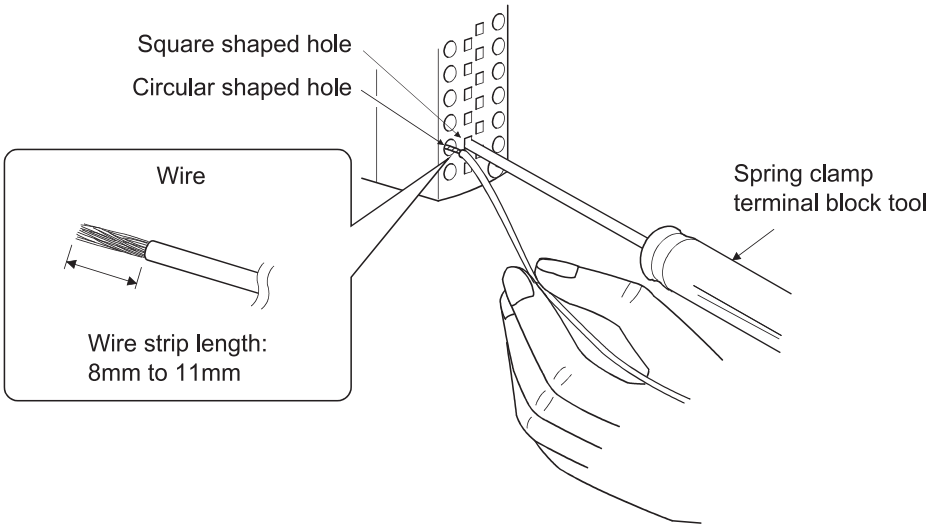

(7) Disconnecting a cable

(a) Insert the tool vertically all the way inside the square shaped hole of the Q6TE-18S(N).

(b) Pull the bar solderless terminal or the wire out of the hole.

(8) List of introductory products

The tools and the bar solderless terminal used for wiring the spring clamp terminal block I/O module are listed below.

Manufacturer	Name of product	Model name	Applicable wire size
Mitsubishi Electric System & Service Co., Ltd.	Spring clamp terminal block tool	KD-5339	—
Nichifu Co.,Ltd.	Bar solderless terminal *1	TE 0.5-8 TE 0.5-10	0.3 to 0.5 mm^2 (22 AWG)
		TE 0.75-8 TE 0.75-10	0.75 mm^2 (20 AWG)
		TE 1.0-8 TE 1.0-10	1.0 mm^2 (18 AWG)
		TE 1.5-8 TE 1.5-10	1.5 mm^2 (16 AWG)
	Bar solderless terminal tool	NH79	—

*1: Use this product when doing the terminal treatment of the wire and inserting it into the spring clamp terminal block.

10. PART NAMES

This chapter explains the part names of I/O modules.

18-point screw terminal block type (other than high-speed input module)

40-pin connector type

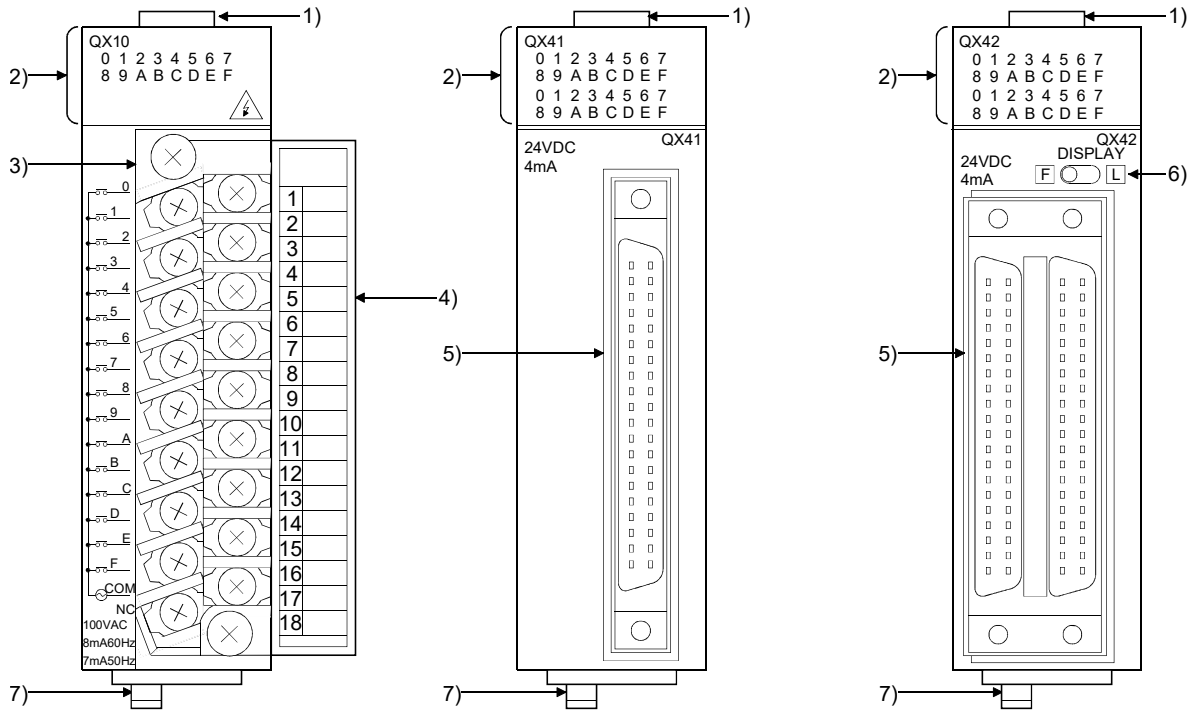

No.	Name	Description
1)	Module fixing hook	Hook used to fix the module to the base unit. (Single-motion installation)
2)	I/O indicator LED	Used to indicate the I/O status (on/off). The corresponding LED turns on when the I/O status is on.
3)	Terminal block	A 18-point terminal block for connecting a power line and I/O signal lines
4)	Terminal cover	Terminal cover with recording paper
5)	40-pin connector	Designed for 32- or 64-point module and used to connect power and I/O signal wires.
6)	Indication selector switch *1	Used to switch the LED indications between the first-half 32 points and latter-half 32 points of a 64-point module.
7)	Module loading lever	Used to mount the module on the base unit.

*1: Operate the indication selector switch with your fingertip.
Do not use a screwdriver or similar tool as it may damage the switch.

37-pin D-sub connector type

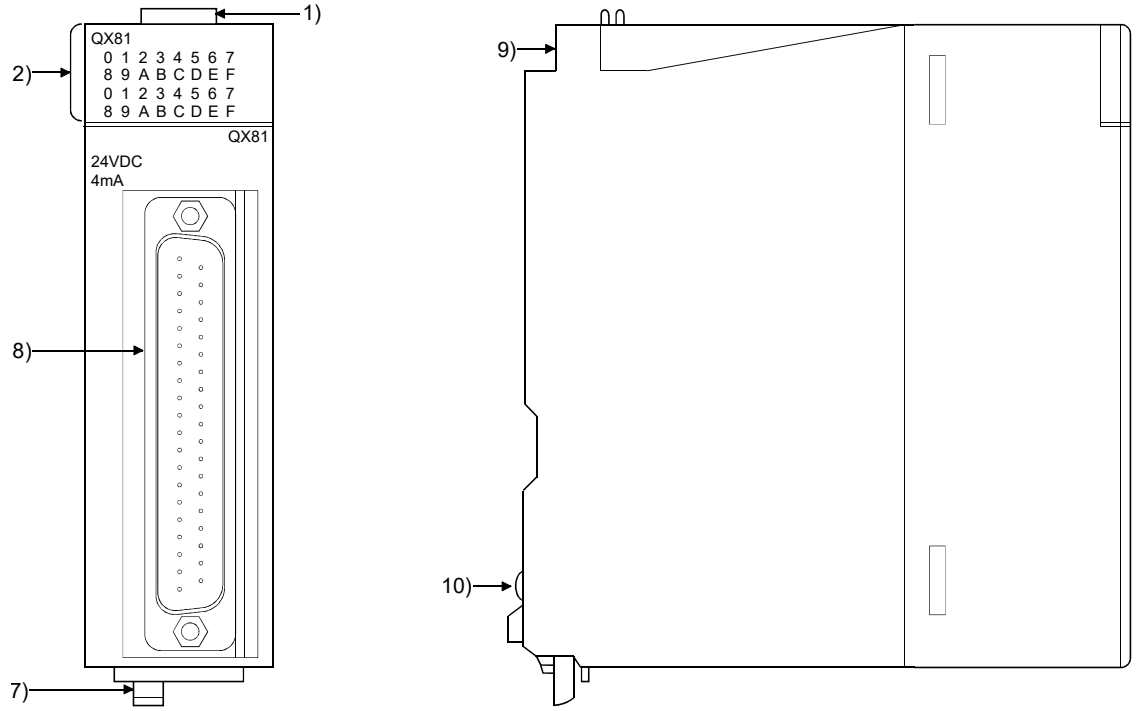

No.	Name	Description
8)	37-pin D-sub connector	Designed for 32 points and used to connect power and I/O signal wires.
9)	Module fixing screw hole	Used to fix the module to the base unit.
10)	Metal fitting	Do not touch as this may be deformed.

18-point screw terminal block type (high-speed input module)

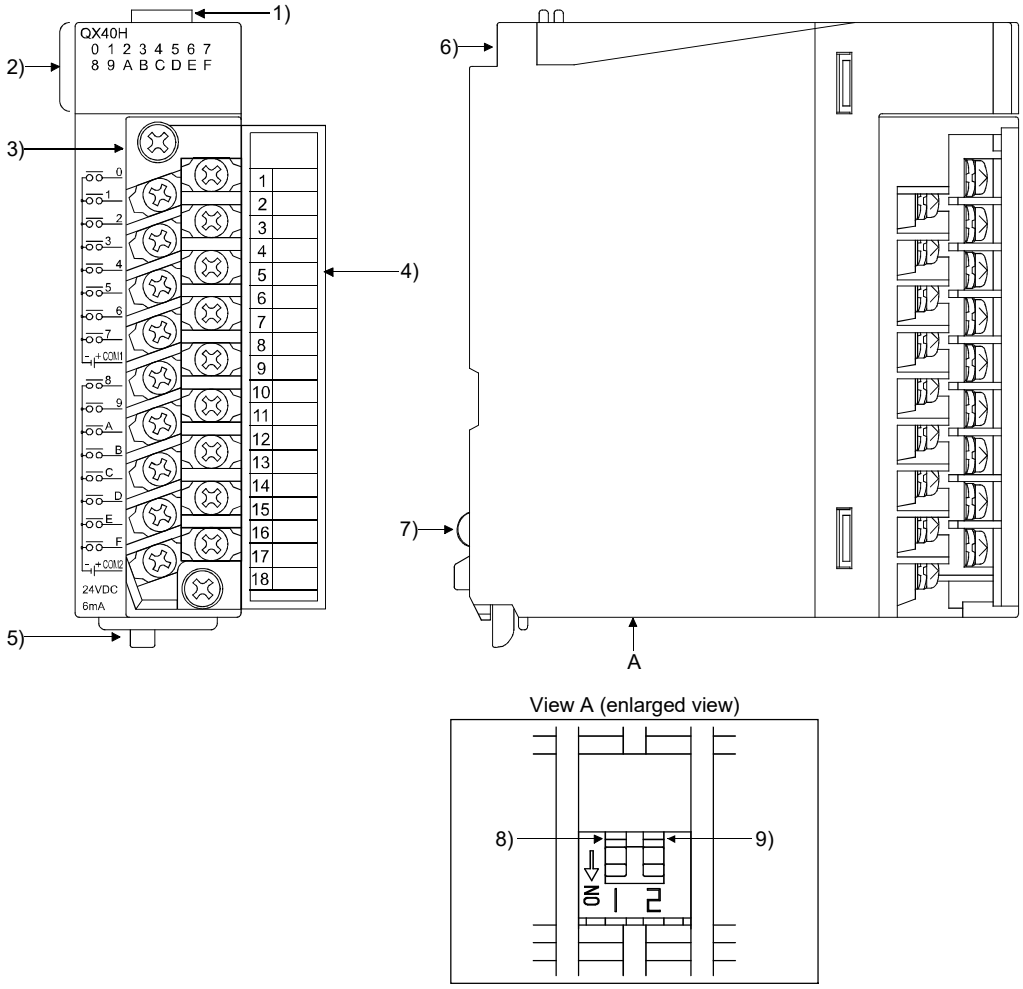

No.	Name	Description
1)	Module fixing hook	Hook used to fix the module to the base unit. (Single-motion installation)
2)	I/O indicator LED	Used to indicate the I/O status (on/off). The corresponding LED turns on when the I/O status is on.
3)	Terminal block	A 18-point terminal block for connecting a power line and I/O signal lines
4)	Terminal cover	Terminal cover with recording paper
5)	Module mounting lever	Used to mount the module into the base unit.
6)	Module fixing screw hole	Used to fix the module to the base unit.
7)	Metal fitting	Do not touch as this may be deformed.
8)	Noise filter selector switch (Switch 1)*1	Used to set valid/invalid noise filters. On: Valid (at the factory default) Off: Invalid
9)	Function selector switch (Switch 2)*1	Used to switch the module function. On: High-speed input module (at the factory default) Off: Interrupt module

*1: Operate the switch with an industrial tool such as a driver, because the switch is placed beyond your reach.
Operate the switch carefully. Failure to do so may result in damage to the switch.

Spring clamp terminal block type

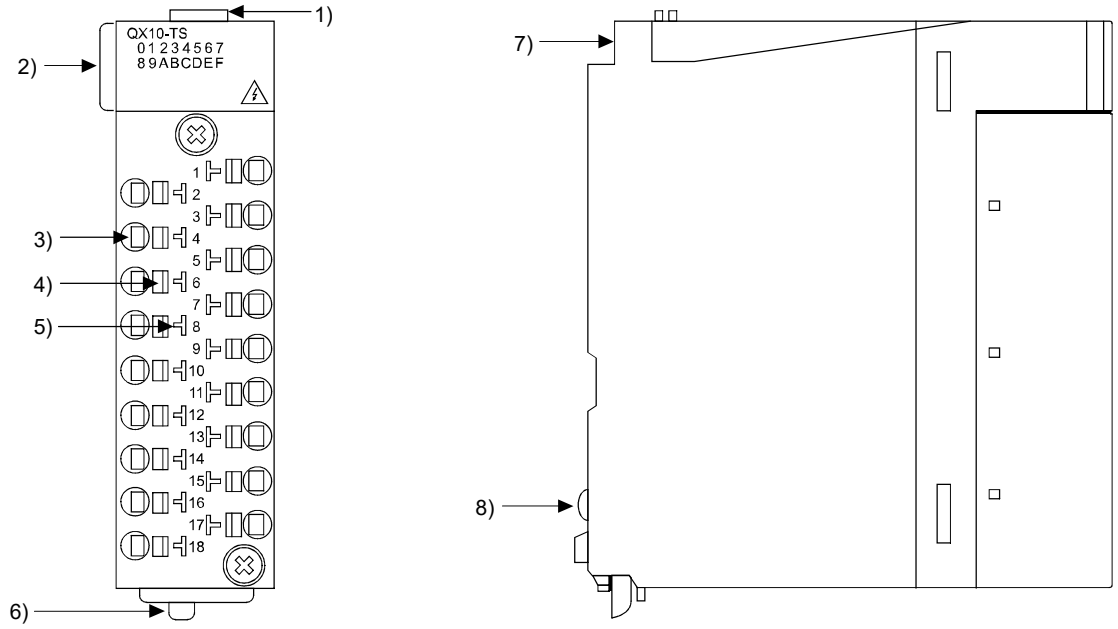

No.	Name	Description
1)	Module fixing hook	Hook used to fix the module to the base unit. (Single-motion installation)
2)	I/O indicator LED	Used to indicate the I/O status (on/off). The corresponding LED turns on when the I/O status is on.
3)	Wire insertion slot	Hole inserted a wire to in wiring (Circular hole)
4)	Tool insertion slot	Hole inserted a spring clamp terminal block tool to in wiring (Square hole)
5)	Connection check indicator	Comes out if a wire is inserted in wiring
6)	Module loading lever	Used to load the module into the base unit
7)	Module fixing screw hole	Used to fix the module to the base unit.
8)	Metal fitting	Do not touch as this may be deformed.

A6TB □ 36 □

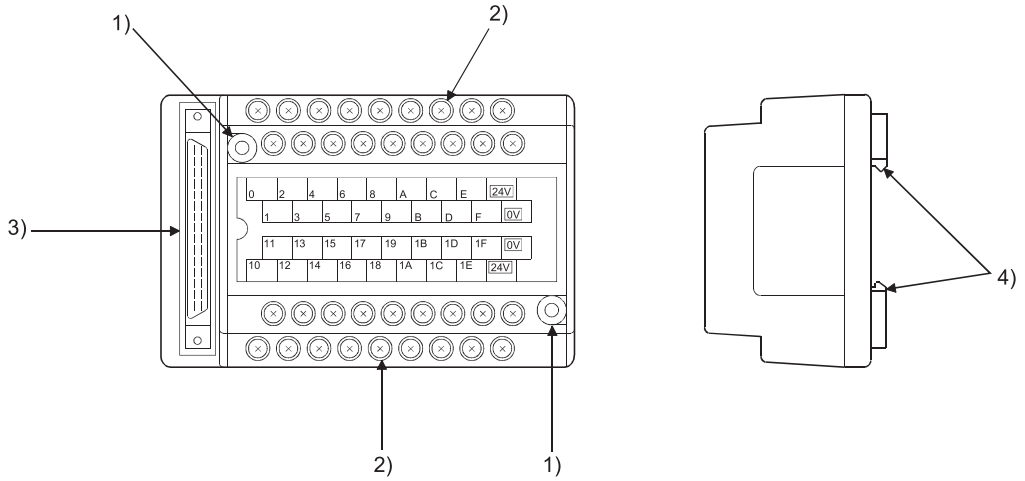

A6TB □ 54 □

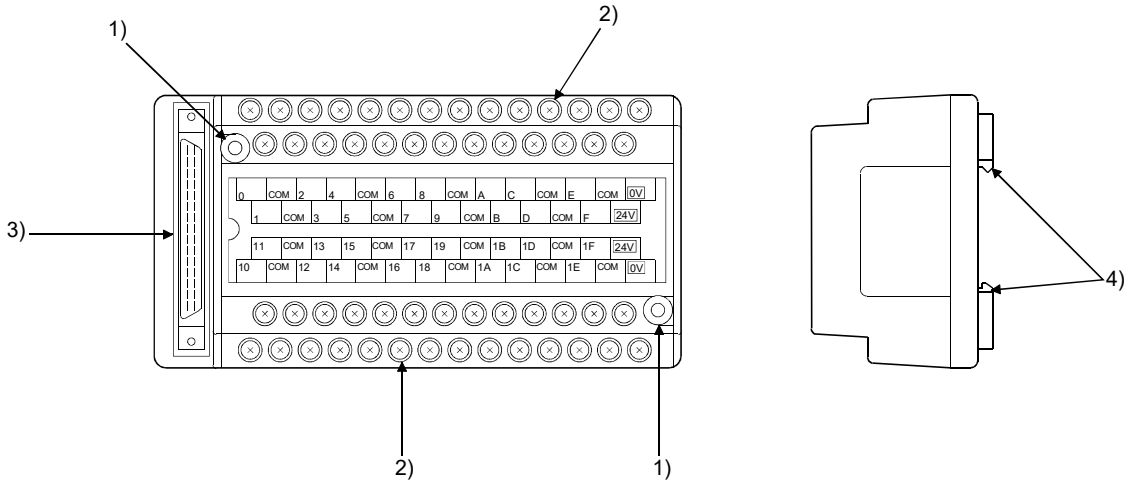

No.	Name	Description
1)	Panel mounting hole	Used for mounting to panel (for M4 screw).
2)	Terminal block	Used to connect power and signal wires.
3)	40-pin connector	Designed for 32-point module and used to connect power and I/O signal wires.
4)	Module fixing hook	Used for mounting onto DIN rail.

A6TBX70 □

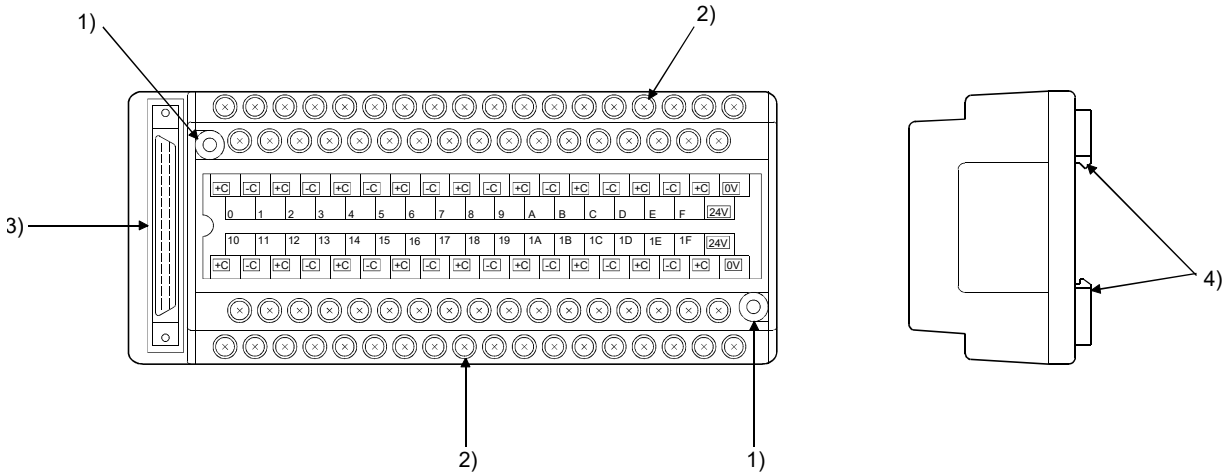

No.	Name	Description
1)	Panel mounting hole	Used for mounting to panel (for M4 screw).
2)	Terminal block	Used to connect power and signal wires.
3)	40-pin connector	Designed for 32-point module and used to connect power and I/O signal wires.
4)	Module fixing hook	Used for mounting onto DIN rail.

Q6TE-18S(N)

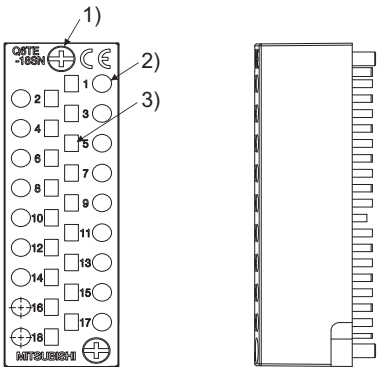

No.	Name	Description
1)	Terminal block mounting screw	Used to fix the Q6TE-18S(N) to a module.
2)	Circular shaped hole	Hole for inserting wire when wiring
3)	Square shaped hole	Hole for inserting a tool when wiring

11. I/O MODULE TROUBLESHOOTING

This chapter explains possible problems with I/O circuits and their corrective actions.

11.1 Input Circuit Troubleshooting

This section describes possible problems with input circuits and their corrective actions.

Table 11.1 Input Circuit Problems and Corrective Actions

	Condition	Cause	Corrective action
Example 1	An input signal does not turn off.	• Leakage current of input switch (e.g. drive by non-contact switch). 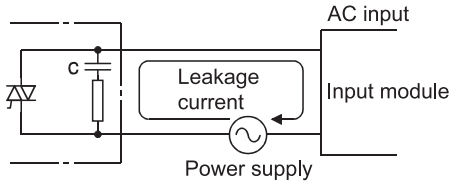 	Connect an appropriate resistor so that the voltage across the terminals of the input module will be less than the off voltage. 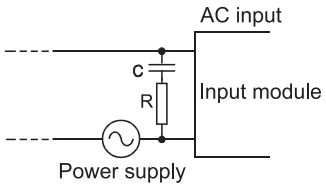 It is recommended to use 0.1 to 0.47 μF + 47 to 120Ω (1/2W) for the CR constant.
Example 2	An input signal does not turn off.	• Drive by a limit switch with neon lamp. 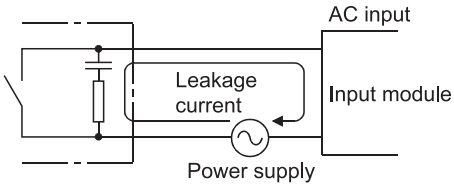 	• Same as Example 1. • Or make up another independent display circuit.
Example 3	An input signal does not turn off.	• Leakage current due to line capacity of wiring cable. (Line capacity C of twisted pair wire is approx. 100 pF/m). 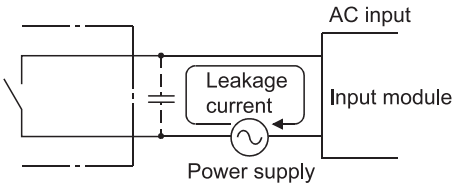 	• Same as Example 1. • However, leakage current is not generated when the power supply is located in the input equipment side as shown below. 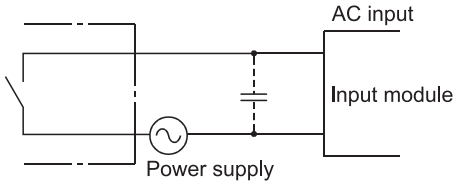

(To the next page)

Table 11.1 Input Circuit Problems and Corrective Actions (Continued)

	Condition	Cause	Corrective action
Example 4	An input signal does not turn off.	• Drive by switch with LED indicator. 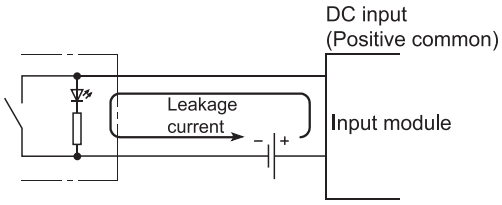 	Connect an appropriate resistor so that the current flow within the module will be less than the off current. 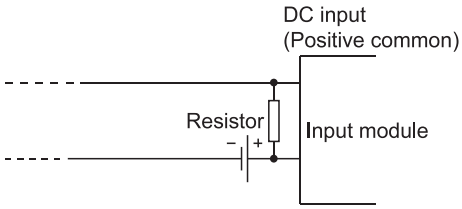 * A calculation example of a value for a connected resistor is given on the following page.
Example 5	An input signal does not turn off.	• Current flow in the opposite direction due to the use of two power supplies 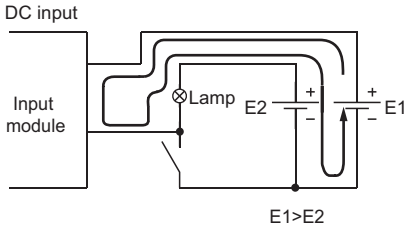 	• Use only one power supply. • Connect a diode so that current flows only in one direction. (Figure below) 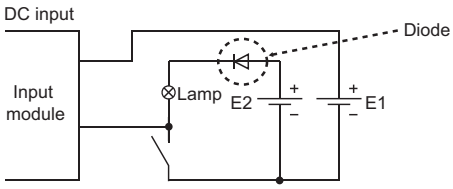
Example 6	An input signal does not turn on (AC input module).	Stepwise distortion as shown below appears to the zero cross voltage of input signal (AC). 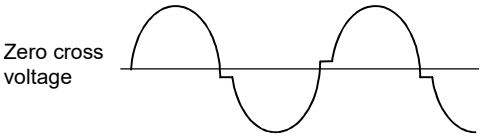 	Improve input signal waveform by using the uninterruptible power system etc.
Example 7	False input due to noise	Noise has been taken as input data.	Change the response time setting value.*1 Example 1ms → 5ms If this action is not effective, take the following measures. • To prevent excessive noise, avoid installing power cables together with I/O cables. • Take noise reduction measures. (Example: Connect surge absorbers to noise-generating devices such as relays and contactors using the same power supply.)

*1: If excessive noise is periodically generated, setting a shorter response time value may be effective.

<Calculation example of Example 4>
Connecting a switch with LED display, in which a maximum 2.33mA leakage current flows when 24VDC is supplied to the QX40.

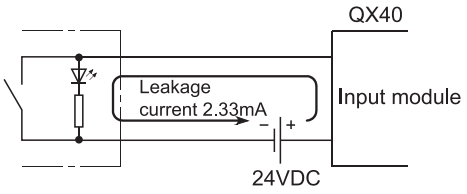

(1) In this case, the circuit does not satisfy the condition that the OFF current of the QX40 is 1.7mA or less.
Connect a resistance as follows.

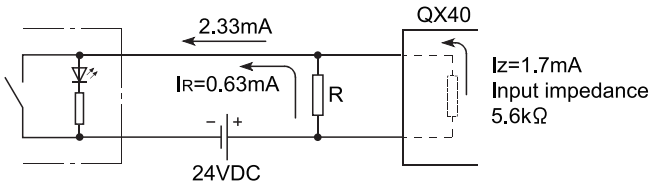

(2) In order to satisfy the condition that the OFF current of the QX40 is 1.7mA or less, the resistance R, in which a 0.63mA or more current flows, shall be connected.
Calculating with the formula,

I_R: I_Z=Z (Input impedance): R

$$R \leqq \frac{I_Z}{I_R} \times Z \text{ (Input impedance)} = \frac{1.7}{0.63} \times 5.6 = 15.11[k\Omega]$$

the resistance R will be R<15.11kΩ.
Consequently, if the resistance R is set to 12kΩ, the electric power W of the resistance R will be calculated in the following formula,
W= (Input voltage)^2/R=28.8^2/12000=0.069[W].

(3) Since the resistance requires the electric power which is 3 to 5 times of the power actually consumed, the resistance to be connected to the corresponding terminal shall be 12.0kΩ and 1/4 to 1[W].

(4) The OFF voltage of the QX40 when the resistance R calculated above is connected will be 8.90[V].

$$\frac{1}{\frac{1}{12.0[k\Omega]} + \frac{1}{5.6[k\Omega]}} \times 2.33[mA] = 8.90[V]$$

This also satisfies the condition that the OFF voltage of the QX40 is 11V or less.

11.2 Output Circuit Troubleshooting

This section describes possible problems with output circuits and their corrective actions.

Table 11.2 Output Circuit Problems and Corrective Actions

	Condition	Cause	Corrective action
Example 1	When the output is off, excessive voltage is applied to the load.	• Load is half-wave rectified inside (in some cases, this is true of a solenoid). 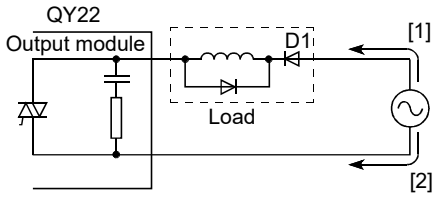 • When the polarity of the power supply is as shown in [1], C is charged. When the polarity is as shown in [2], the voltage charged in C plus the line voltage are applied across D1. Max. voltage is approx. 2.2E. (If a circuit is used in this way, it does not pose a problem to the output element. But it may cause the diode, which is built into the load, to deteriorate, resulting in a fire, etc.)	• Connect a resistor several tens to hundreds of kΩ across the load. 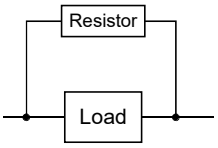
Example 2	The load does not turn off. (triac output)	• Leakage current due to built-in surge suppressor. 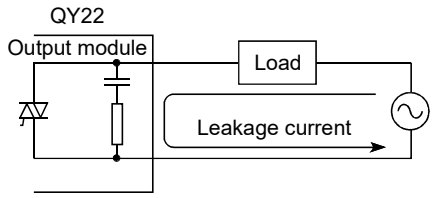 	• Connect a resistor across the load. (When the wiring distance from the output module to the load is long, there may be a leakage current due to the line capacity.) 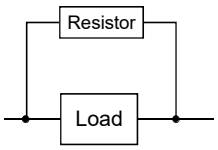

(To the next page)

Table 11.2 Output Circuit Problems and Corrective Actions (Continued)

	Condition	Cause	Corrective action
Example 3	The load does not turn off. (triac output)	• If the load current is insufficient (lower than 25mA), the triac does not operate, causing the load current to flow into a phototriac as shown below. If an inductive load is connected in this condition, the load may not turn off because surge at the time of off is applied to the phototriac. 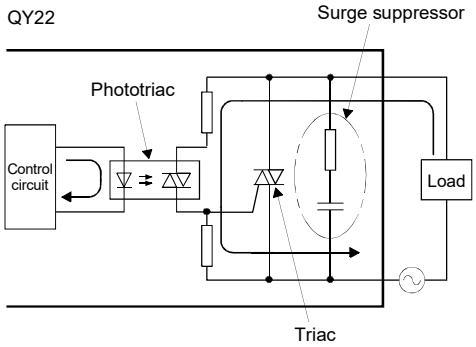 	• Connect a resistor to both ends of the load so that the load current of approx. 100mA flows and the triac operation is stable. Resistance value ≤ Voltage across the load / 100mA 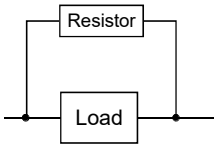 (Example) When using 100VAC (output voltage), for instance, calculate the resistance value from the formula below. 100VAC / 100mA = 1kΩ Resistance value = 1kΩ

(To the next page)

Table 11.2 Output Circuit Problems and Corrective Actions (Continued)

	Condition	Cause	Corrective action
Example 4	When the external power supply turns on, the load turns on for a moment. (transistor output)	Erroneous output due to the stray capacitance (C) between collector and emitter of photocoupler. (There is no erroneous output at normal load. An erroneous output may occur at high sensitivity load (such as solid state relay)) 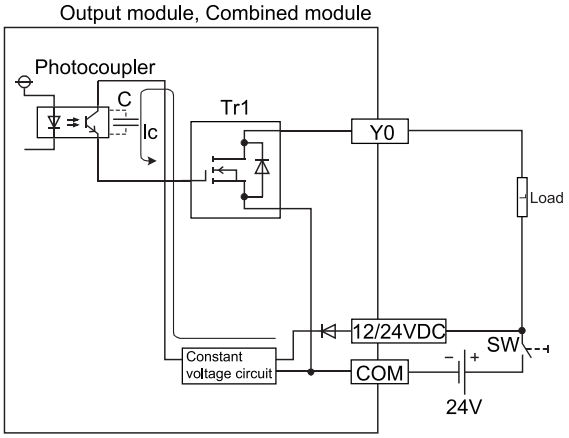 (1) If the external power supply is turned on precipitously, Ic current flows due to the stray capacitance (C) between collector and emitter of photocoupler. (2) Ic current flows to the next stage of transistor Tr1 gate and Y0 output turns on by 100 μs. 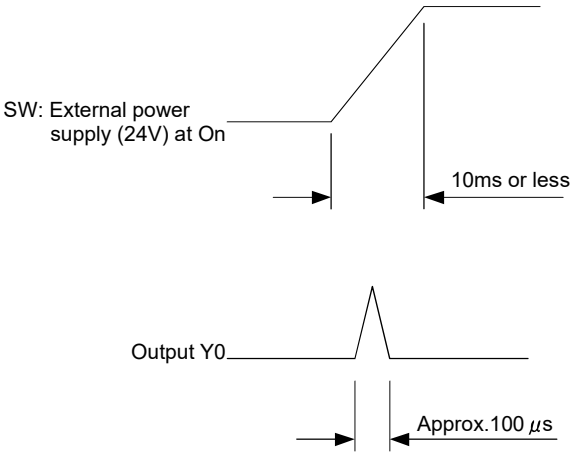 	(1) To turn on or off the external power supply, check that the external power supply rising edge must be 10ms or more, and switch the SW1 to the primary side of external power supply. 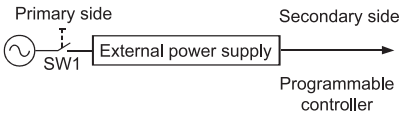 (2) When switching to the secondary side of the external power supply is required, the external power supply rising edge connected a condenser and a resistor must be slow, and measured 10ms or more. Sink output 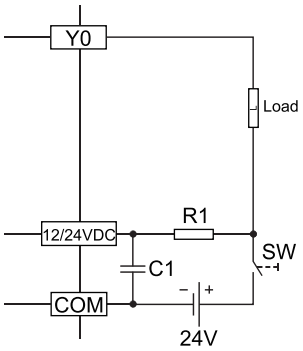 Source output 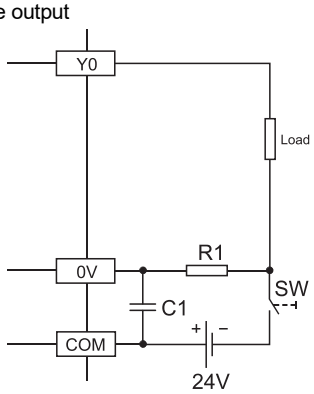 * The measures are ineffective in the following modules due to the characteristic of the external power supply circuit • QY81P • QY82P R1: Several tens of ohms Power capacity ≧ (external power supply current*1)^2 × resistance value × (3 to 5)*2 C1: several hundreds of microfarads 50V *1 Refer to current consumption of the external power supply for modules used in this manual. *2 Select the power capacity of resistance to be 3 to 5 times larger than the actual power consumption. (Example) R1=40Ω, C1=300 μF Use the below expression to calculate a time constant C1 × R1=300 × 10^{-6} × 40 =12 × 10^{-3}s=12ms

(To the next page)

Table 11.2 Output Circuit Problems and Corrective Actions (Continued)

	Condition	Cause	Corrective action
Example 5	The load momentarily turns on when the system is powered off (transistor output).	If an inductive load is connected, the load may turn on from off ([2]) due to back electromotive force at the time of power-off ([1]). Output module, I/O combined module Source output 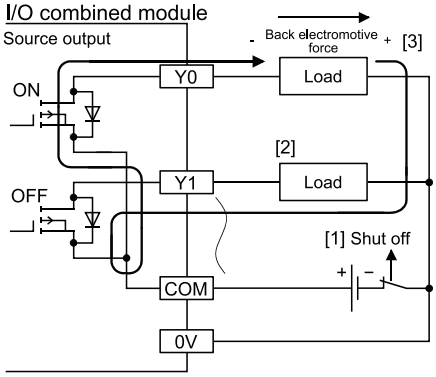 Output module, I/O combined module Sink output 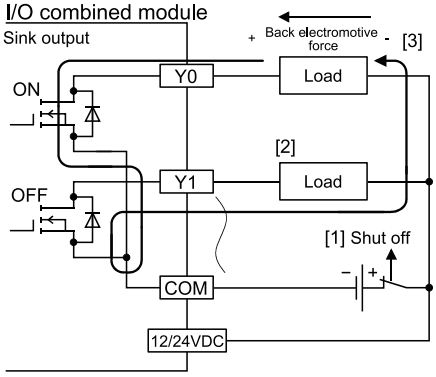 	Take one of the following actions. (1) To suppress back electromotive force, connect a diode in parallel with the load where the back electromotive force has been generated. Source output [3] 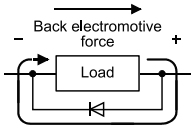 Sink output [3] 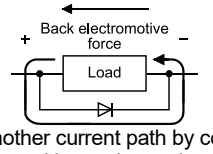 (2) Configure another current path by connecting a diode across positive and negative of the external power supply. When the corrective action described in the example 4 is taken at the same time, connect a diode in parallel with C1 and R1. 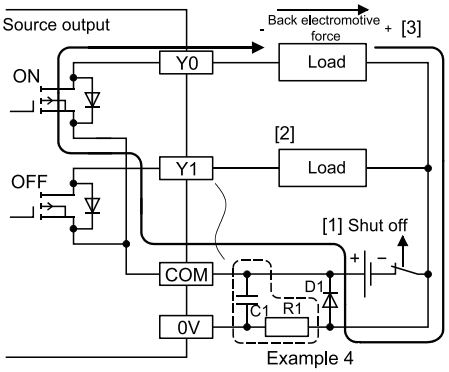 Example 4 * The measures are ineffective in the following modules due to the characteristic of the external power supply circuit • QY81P • QY82P 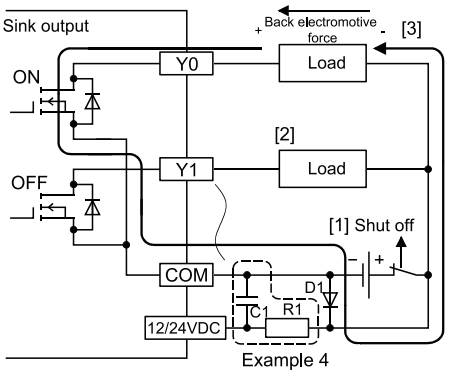 Example 4 D1: Reverse voltage VR(VRM) ··· *1, Forward current IF(IFM) ··· *2 *1 Approximately 10 times higher than the rated voltage in the specifications Example: 24 VDC → Approximately 200V *2 Two times or more as much as the maximum load current (common) in the specifications Example: 2A/1 common → 4A or more

(To the next page)

Table 11.2 Output Circuit Problems and Corrective Actions (Continued)

	Condition	Cause	Corrective action
Example 6	The load operates only by powering on the external power supply. (transistor output)	The polarity to connect the external power supply is reverse. 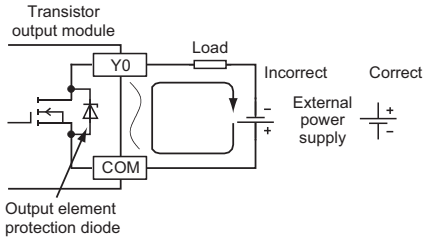 If the external power supply is connected with wrong polarity, current may flow across an output element protection diode to the load.	Connect the external power supply with correct polarity.
Example 7	When an output is turned on, a load connected to the other output is also turned on. (transistor output (source type))	If the wire connecting 0V of an external power supply and a common of a load is cut off or disconnected, a current flows to the load that is off due to a parasitic circuit of the output element that is off. 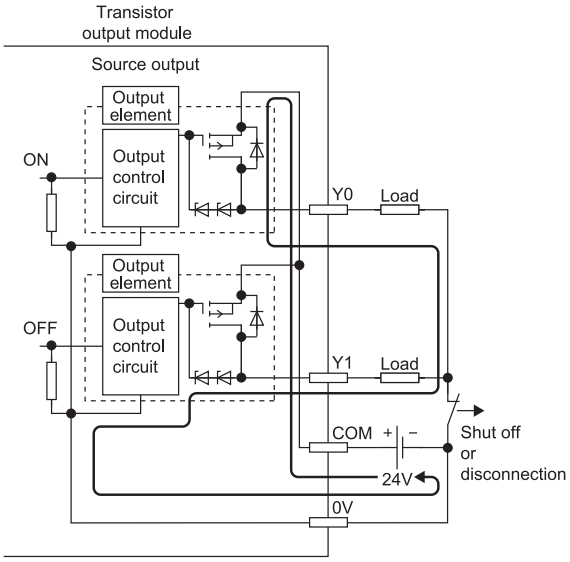 If a current keeps flowing under the above condition, a failure may occur.	Connect the external power supply and loads correctly. To prevent the condition described on the left, connect a diode to each output terminal as shown below. 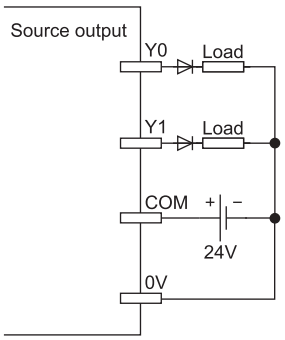

A

APPENDICES

Appendix 1 External Dimensions

Appendix 1.1 I/O modules and blank cover module

(1) Terminal block connector type

(a) Other than QY22

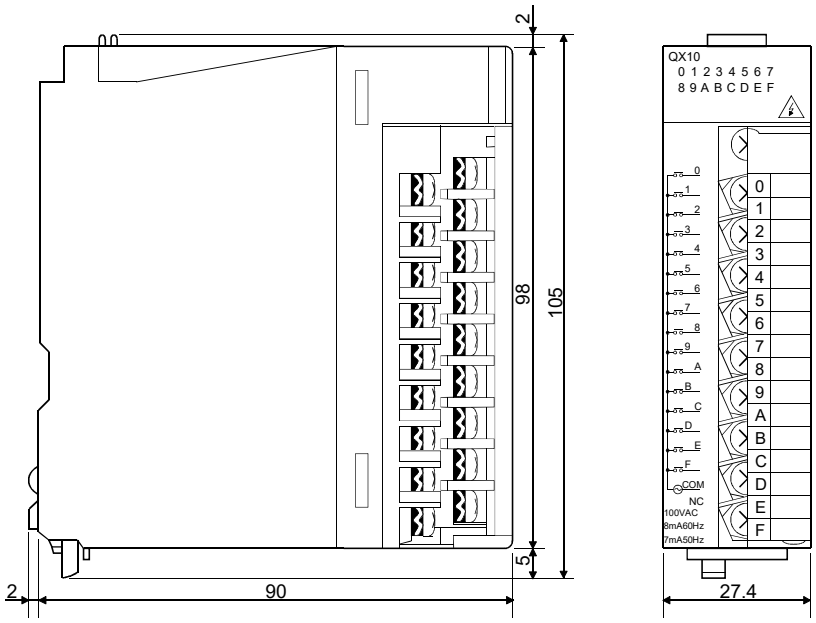

Unit: mm

(b) QY22 triac output module

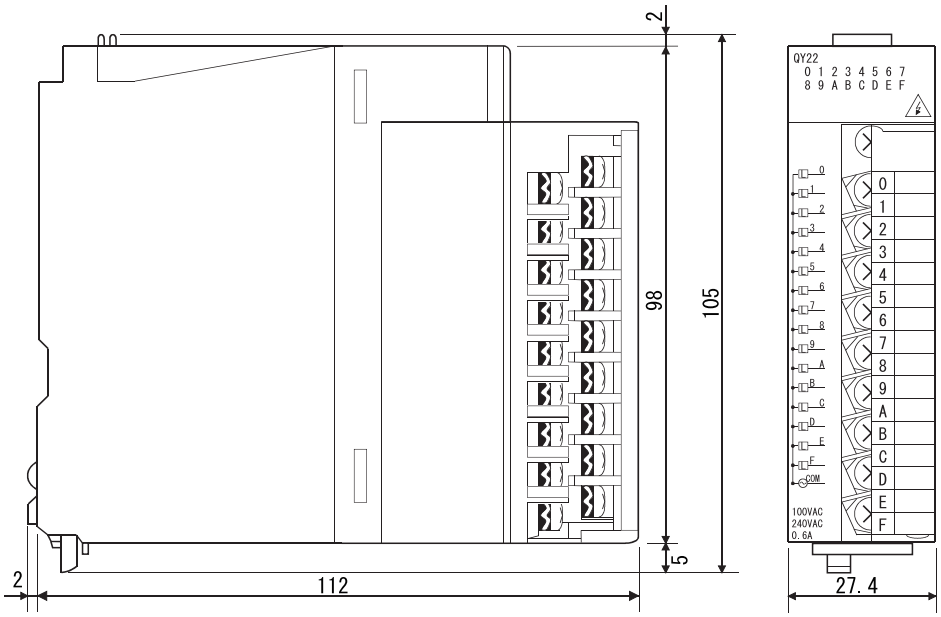

Unit: mm

(2) Spring clamp terminal block type

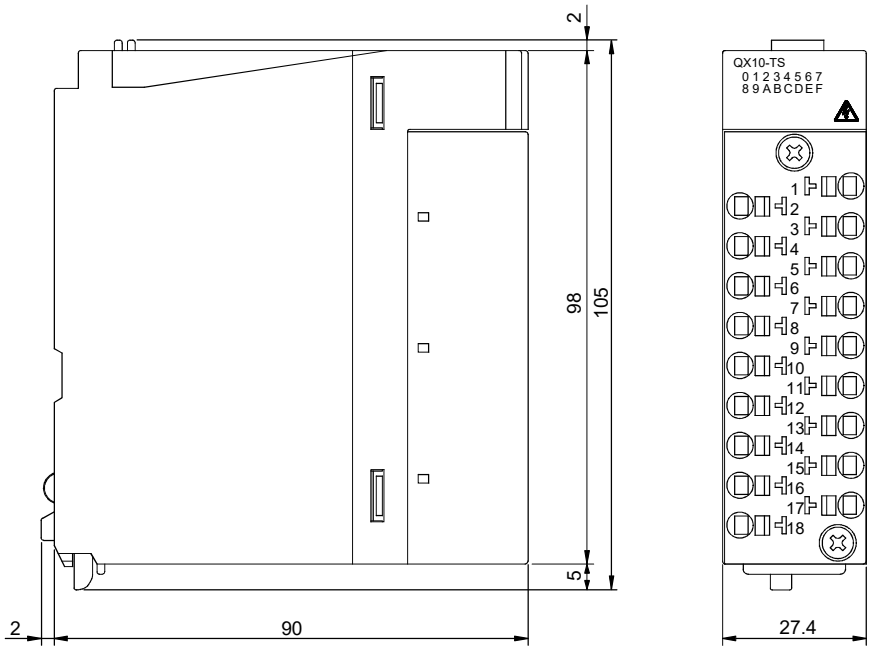

Unit: mm

(3) 40-pin connector type

(a) 32-point I/O module

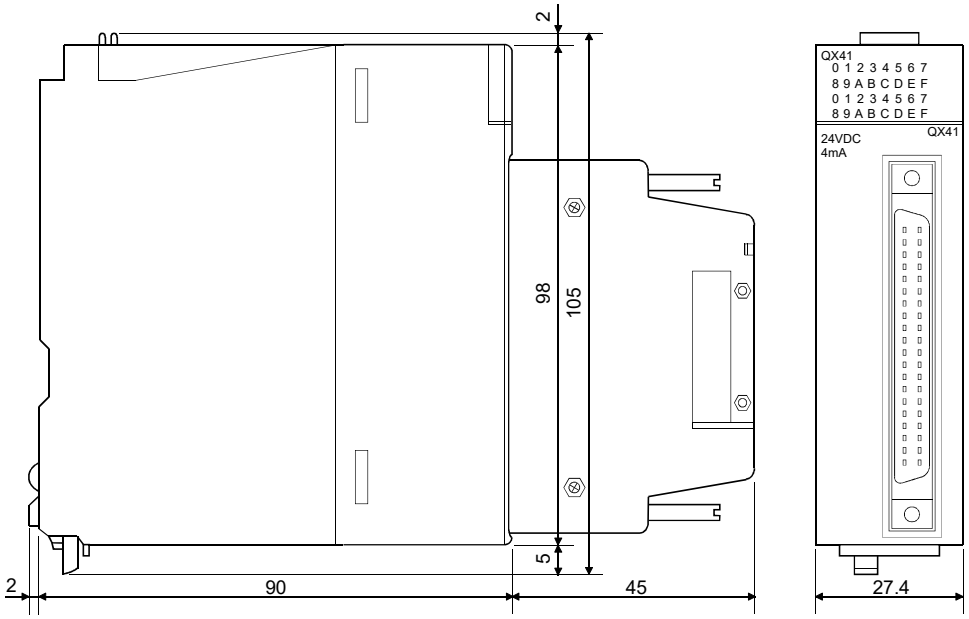

Unit: mm

(b) 64-point I/O module

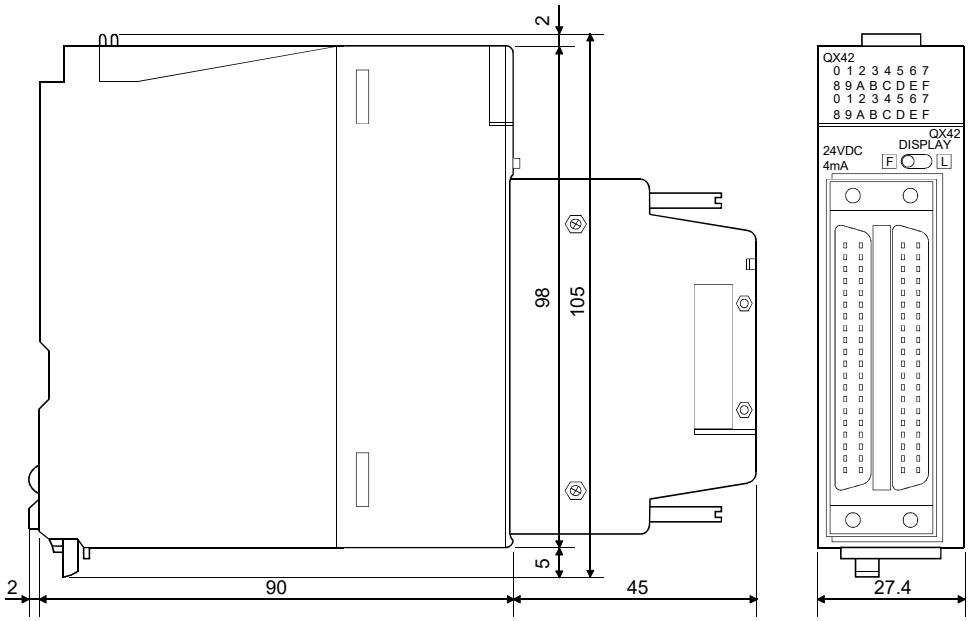

Unit: mm

(4) 37-pin D-sub connector type 32-point I/O module

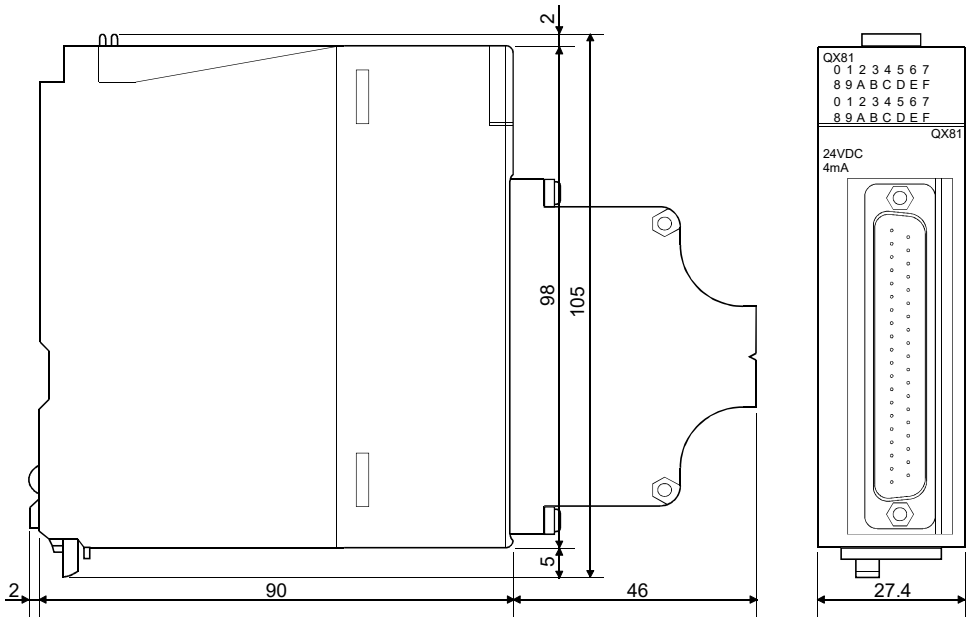

Unit: mm

(5) Blank cover module

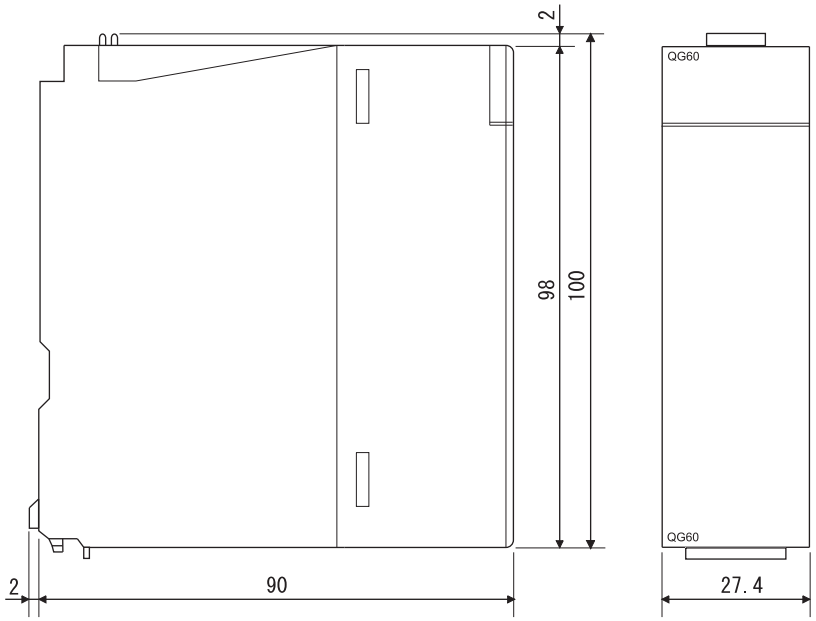

Unit: mm

Appendix 1.2 Connectors, connector/terminal block converter modules

(1) 40-pin connectors

(a) A6CON1 soldering type, A6CON2 crimp-contact type 40-pin connector

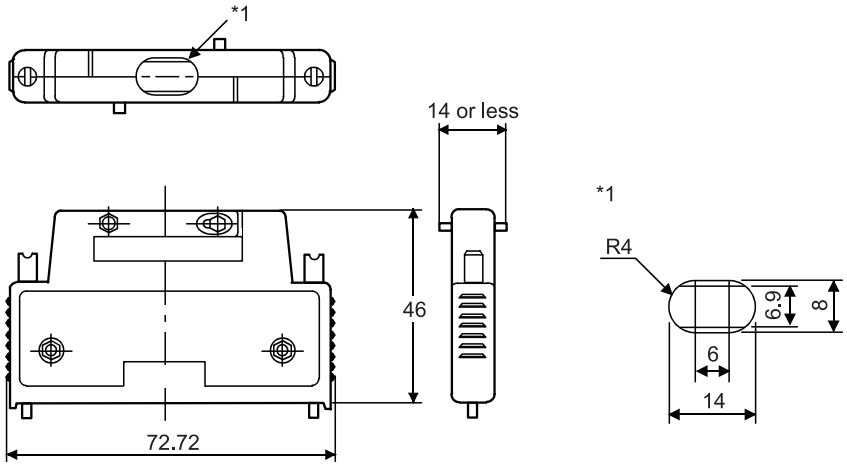

Unit: mm

(b) A6CON3 pressure-displacement type 40-pin connector

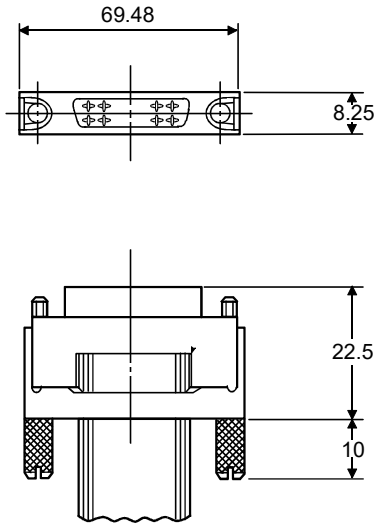

* Flat cable arrangement is in the following sequence.
A1 → B1 → A2…

Unit: mm

(c) A6CON4 soldering type

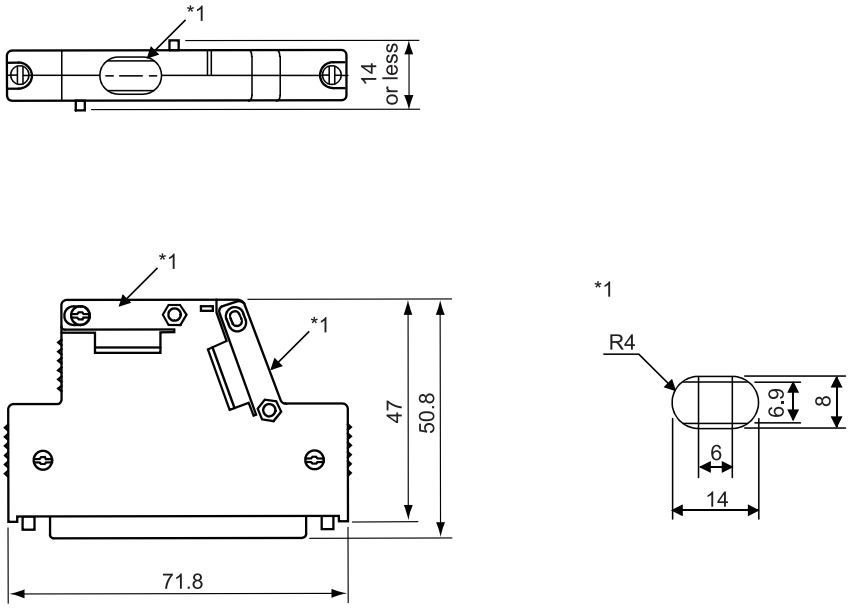

Unit: mm

If the cable diameter is thinner than the clamp portion, wind tape, etc. to secure the cable so that it will not come off the cable clamp portion.
If the cable is made of slippery material, it is recommended to take anti-slip measures by winding rubber-based tape, etc.

(2) 37-pin D-sub connectors

(a) A6CON1E soldering type 37-pin D sub-connector (straight out type)
A6CON2E crimp-contact-type 37-pin D sub-connector (straight out type)

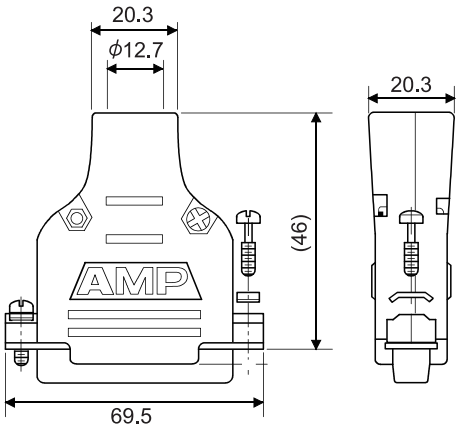

Unit: mm

(b) A6CON3E pressure-displacement type 37-pin D-sub connector (flat cable type)

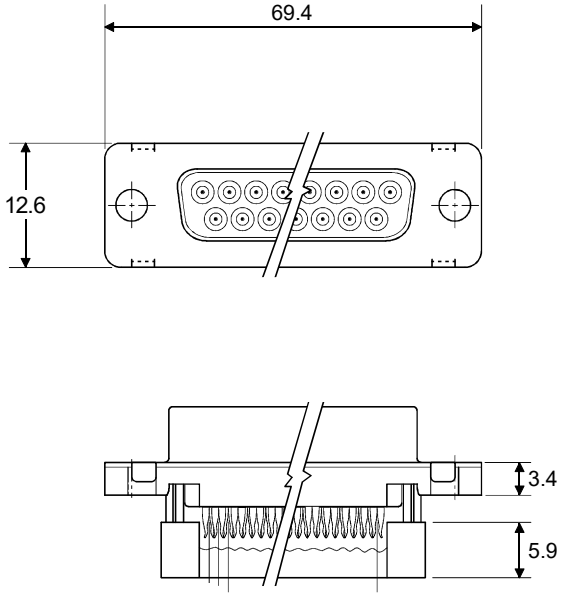

Unit: mm

(3) A6TB □ 36 □ connector/terminal block converter module

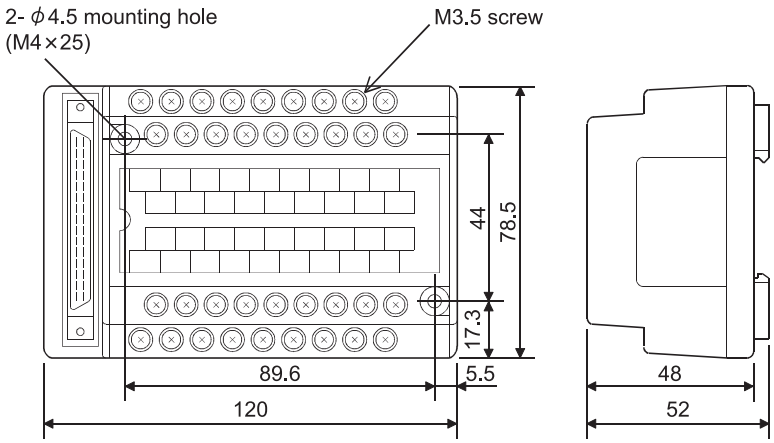

Unit: mm

(4) A6TB □ 54 □ connector/terminal block converter module

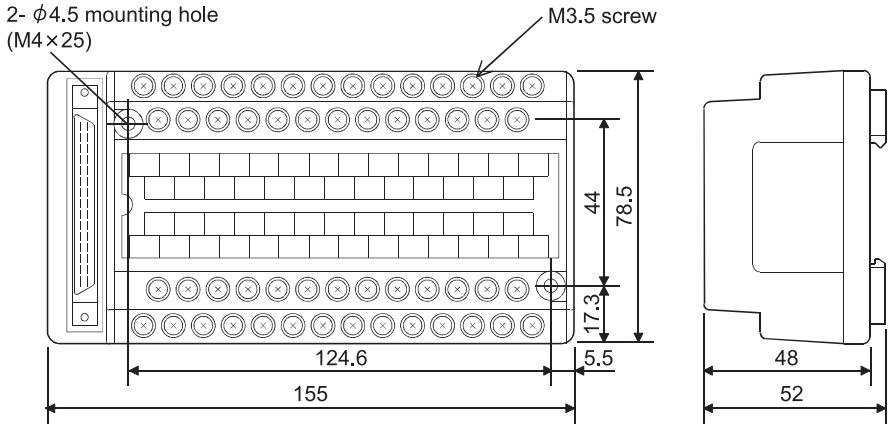

Unit: mm

(5) A6TBX70 □ connector/terminal block converter module

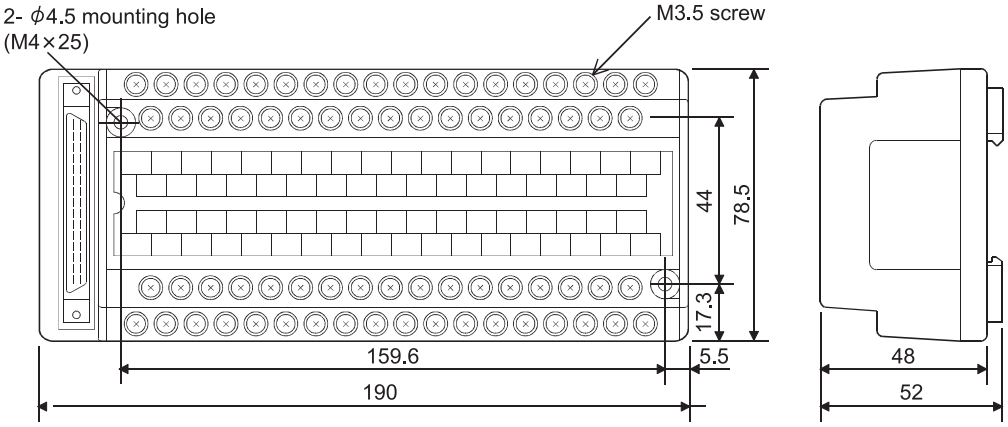

Unit: mm

Appendix 1.3 Connector/terminal block converter module cable

(1) AC □□ TB

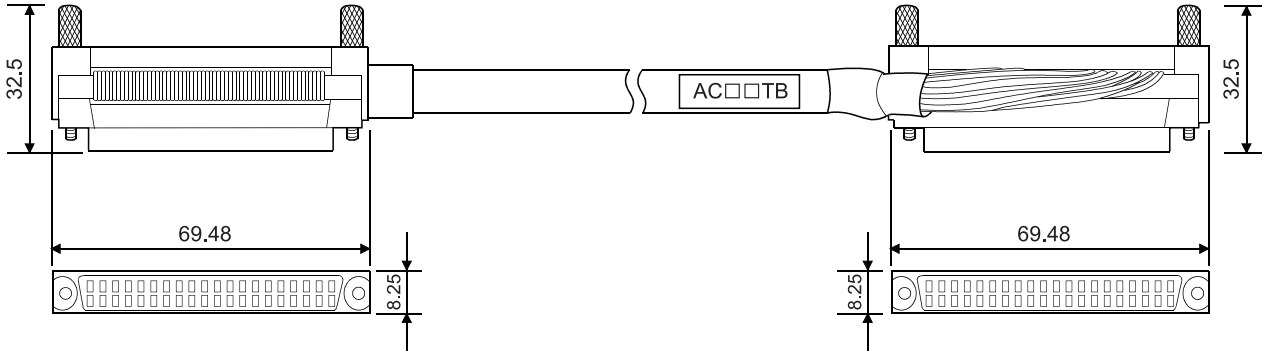

Unit: mm

(2) AC □□ TB-E

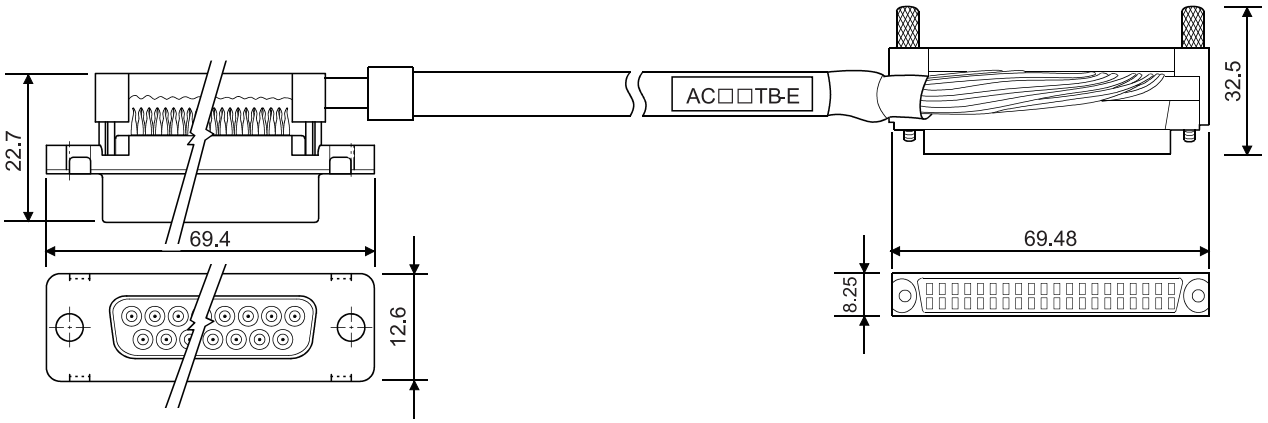

Unit: mm

Appendix 1.4 Spring clamp terminal block

(1) Q6TE-18S(N)

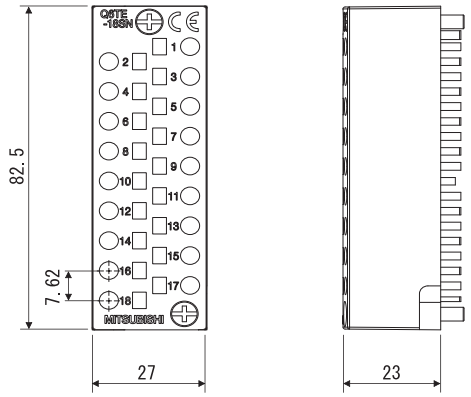

Installed on a module (Example: QX10)

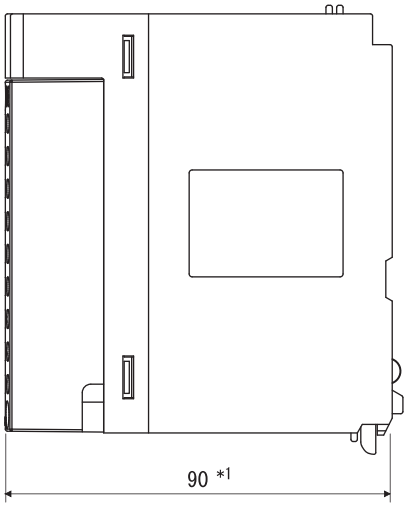

Unit: mm

*1: The depth of the module installed with the Q6TE-18S(N) is equivalent with the factory default dimensions for that module.

Appendix 2 Compatibility with MELSEC-AnS Series I/O Modules

Note that the MELSEC-Q series I/O modules and MELSEC-AnS series I/O modules are different in external terminal block configuration.
Differences in terminal block configuration are indicated below.

(1) Input modules

Terminal Block Number	QX10, QX40	QX80	A1SX10, A1SX40, A1SX80
TB9	X08	X08	COM
TB10	X09	X09	X08
TB11	X0A	X0A	X09
• • •	• • •	• • •	• • •
TB16	X0F	X0F	X0E
TB17	COM	NC	X0F
TB18	NC	COM	COM
TB19	—	—	NC
TB20	—	—	NC

(2) Output modules

Terminal Block Number	QY10	QY40P	A1SY10	A1SY40
TB9	Y08	Y08	COM1	12/24VDC
TB10	Y09	Y09	Y08	COM1
TB11	Y0A	Y0A	Y09	Y08
• • •	• • •	• • •	• • •	• • •
TB16	Y0F	Y0F	Y0E	Y0D
TB17	COM	12/24VDC	Y0F	Y0E
TB18	NC	COM	COM2	Y0F
TB19	—	—	24VDC	12/24VDC
TB20	—	—	0V	COM2

Terminal Block Number	QY50	A1SY50
TB9	Y08	12/24VDC
TB10	Y09	COM1
TB11	Y0A	Y08
• • •	• • •	• • •
TB16	Y0F	Y0D
TB17	12/24VDC	Y0E
TB18	COM	Y0F
TB19	—	12/24VDC
TB20	—	COM2

Terminal Block Number	QY80	A1SY80
TB9	Y08	COM1
TB10	Y09	0V
TB11	Y0A	Y08
• • •	• • •	• • •
TB16	Y0F	Y0D
TB17	COM	Y0E
TB18	0V	Y0F
TB19	—	COM2
TB20	—	0V

POINT

The 40-pin connector used with the MELSEC-AnS series I/O module can be used intact with the MELSEC-Q series I/O module.
The 37-pin D-sub connector used with the MELSEC-AnS series I/O module is the same in wiring as, but opposite in cable pulling direction to, the MELSEC-Q series I/O module. (The conventional cable for A6TB cannot be used.)

MEMO

WARRANTY

Please confirm the following product warranty details before using this product.

1. Gratis Warranty Term and Gratis Warranty Range

If any faults or defects (hereinafter "Failure") found to be the responsibility of Mitsubishi occurs during use of the product within the gratis warranty term, the product shall be repaired at no cost via the sales representative or Mitsubishi Service Company.

However, if repairs are required onsite at domestic or overseas location, expenses to send an engineer will be solely at the customer's discretion. Mitsubishi shall not be held responsible for any re-commissioning, maintenance, or testing on-site that involves replacement of the failed module.

[Gratis Warranty Term]

The gratis warranty term of the product shall be for one year after the date of purchase or delivery to a designated place. Note that after manufacture and shipment from Mitsubishi, the maximum distribution period shall be six (6) months, and the longest gratis warranty term after manufacturing shall be eighteen (18) months. The gratis warranty term of repair parts shall not exceed the gratis warranty term before repairs.

[Gratis Warranty Range]

(1) The range shall be limited to normal use within the usage state, usage methods and usage environment, etc., which follow the conditions and precautions, etc., given in the instruction manual, user's manual and caution labels on the product.

(2) Even within the gratis warranty term, repairs shall be charged for in the following cases.

1. Failure occurring from inappropriate storage or handling, carelessness or negligence by the user. Failure caused by the user's hardware or software design.
2. Failure caused by unapproved modifications, etc., to the product by the user.
3. When the Mitsubishi product is assembled into a user's device, Failure that could have been avoided if functions or structures, judged as necessary in the legal safety measures the user's device is subject to or as necessary by industry standards, had been provided.
4. Failure that could have been avoided if consumable parts (battery, backlight, fuse, etc.) designated in the instruction manual had been correctly serviced or replaced.
5. Failure caused by external irresistible forces such as fires or abnormal voltages, and Failure caused by force majeure such as earthquakes, lightning, wind and water damage.
6. Failure caused by reasons unpredictable by scientific technology standards at time of shipment from Mitsubishi.
7. Any other failure found not to be the responsibility of Mitsubishi or that admitted not to be so by the user.

2. Onerous repair term after discontinuation of production

(1) Mitsubishi shall accept onerous product repairs for seven (7) years after production of the product is discontinued. Discontinuation of production shall be notified with Mitsubishi Technical Bulletins, etc.

(2) Product supply (including repair parts) is not available after production is discontinued.

3. Overseas service

Overseas, repairs shall be accepted by Mitsubishi's local overseas FA Center. Note that the repair conditions at each FA Center may differ.

4. Exclusion of loss in opportunity and secondary loss from warranty liability

Regardless of the gratis warranty term, Mitsubishi shall not be liable for compensation to:

(1) Damages caused by any cause found not to be the responsibility of Mitsubishi.

(2) Loss in opportunity, lost profits incurred to the user by Failures of Mitsubishi products.

(3) Special damages and secondary damages whether foreseeable or not, compensation for accidents, and compensation for damages to products other than Mitsubishi products.

(4) Replacement by the user, maintenance of on-site equipment, start-up test run and other tasks.

5. Changes in product specifications

The specifications given in the catalogs, manuals or technical documents are subject to change without prior notice.

The company names, system names and product names mentioned in this manual are either registered trademarks or trademarks of their respective companies.
In some cases, trademark symbols such as '™' or '®' are not specified in this manual.

SH(NA)-080042-AG

SH(NA)-080042-AG(2403)MEE
MODEL: Q-IO-U-E
MODEL CODE: 13JL99

MITSUBISHI ELECTRIC CORPORATION
HEAD OFFICE: TOKYO BLDG., 2-7-3, MARUNOUCHI, CHIYODA-KU, TOKYO 100-8310, JAPAN
NAGOYA WORKS: 1-14, YADA-MINAMI 5-CHOME, HIGASHI-KU, NAGOYA 461-8670, JAPAN

When exported from Japan, this manual does not require application to the Ministry of Economy, Trade and Industry for service transaction permission.

Specifications subject to change without notice.